PRODUKT-INFO

TACT SWITCH

DSL

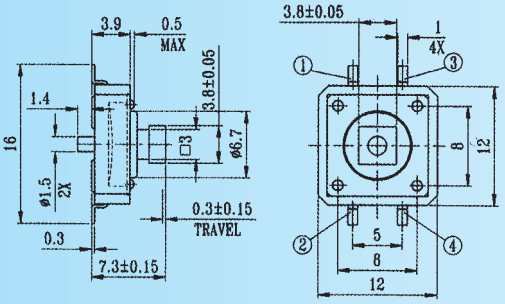

TD-12ET series
TD-12XT series

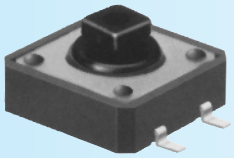

MODEL	GUIDE PIN	TAPE & REEL OPTION
TD-12ET	With	No
TD-12XT	Without	No

COVER TYPE	CODE
PLASTIC	A01
METAL	A00

CODE	Operating Force, gf
X	160±50
Z	250±100

1. RATING: DC 12V 50mA
2. TRAVEL: 0.3 ± 0.15 mm
3. CONTACT RESISTANCE 100mΩ MAX

CIRCUIT DIAGRAM

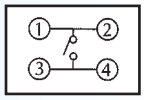

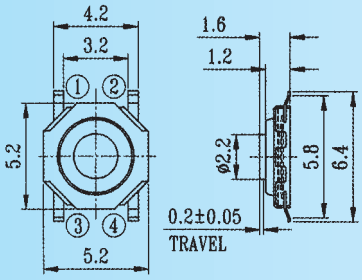

TD-13MA
TD-13XA series
anti dust

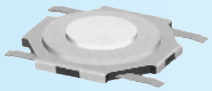

MODEL	Stem Material	TAPE & REEL OPTION
TD-13XA	Nylon	Yes
TD-13MA	Brass	Yes

CODE	Operating Force, gf
X	160±50
Z	250±100

1. RATING: DC 12V 50mA
2. TRAVEL: 0.2 ± 0.05 mm
3. CONTACT RESISTANCE 100mΩ MAX

CIRCUIT DIAGRAM

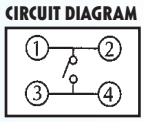

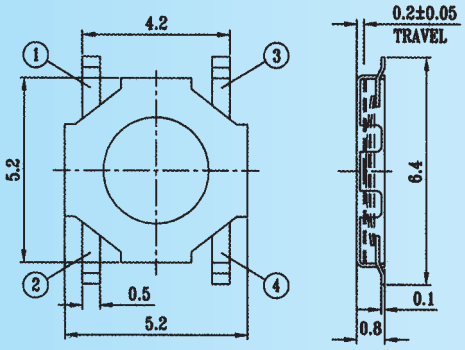

TD-14XA series
anti dust

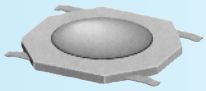

CODE	Operating Force, gf	TAPE & REEL OPTION
X	160±50	Yes
Z	250±100	Yes

1. RATING: DC 12V 50mA
2. TRAVEL: 0.2 ± 0.05 mm
3. CONTACT RESISTANCE 100mΩ MAX
4. TAPE & REEL OPTION: YES

CIRCUIT DIAGRAM

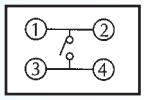

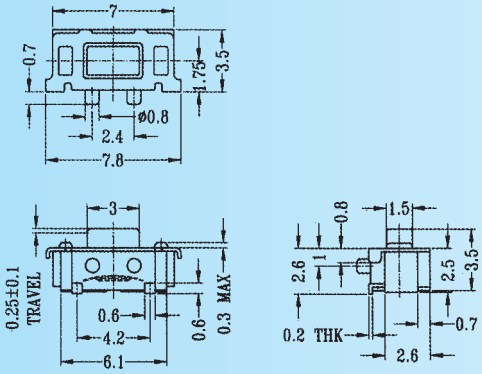

TD-15XA series
TD-15EA series

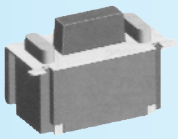

CODE	Operating Force, gf
Y	180±50
Z	250±100

1. RATING: DC 12V 50mA
2. TRAVEL: 0.25 ± 0.1 mm
3. CONTACT RESISTANCE 100mΩ MAX
4. TAPE & REEL OPTION: YES

CIRCUIT DIAGRAM

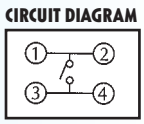

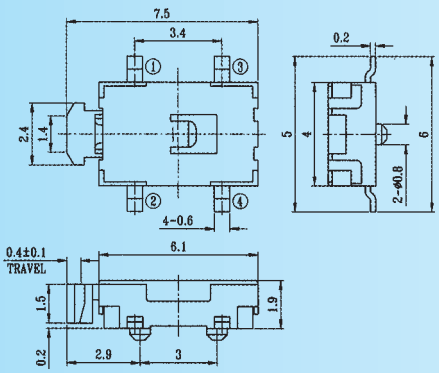

TD-16EA series
anti dust

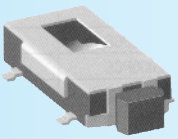

CODE	Operating Force, gf
Y	180±50
Z	250±100

1. RATING: DC 12V 50mA
2. TRAVEL: 0.25 ± 0.1 mm
3. CONTACT RESISTANCE 100mΩ MAX
4. TAPE & REEL OPTION: YES

CIRCUIT DIAGRAM

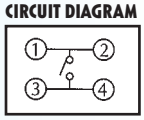

All specifications subject to change without notice.

digital electronic siegfried lehrer gmbh
Bubesheimer Str. 5 · 89340 Leipheim, Germany
Tel. +49 (0) 8221/708-0 · Fax +49 (0) 8221/708-80
www.digitallehrer.de
digital@digitallehrer.de