VERTICAL SLIDE SWITCH

DSL

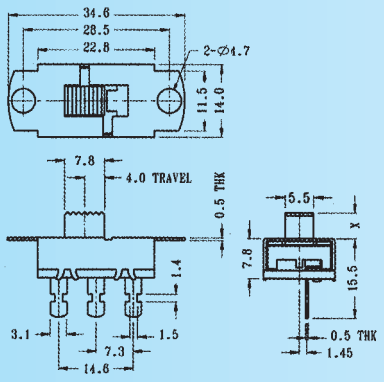

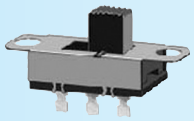

SS-12H08

Rating: 1.5A 250V AC
Function: 1P2T

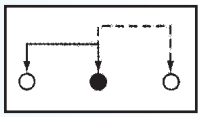

N NON-SHORTING

Optional Knob type

GT	TA	VB	GE	GD	FM

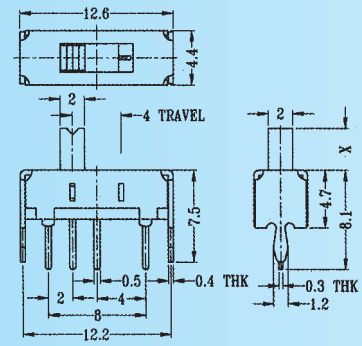

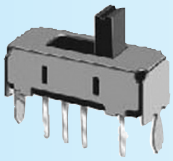

SS-12H08

Rating: 0.3A 50V DC
Function: 1P2T

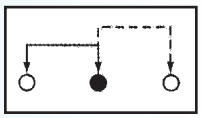

N NON-SHORTING

Optional Knob type

GE	VA				

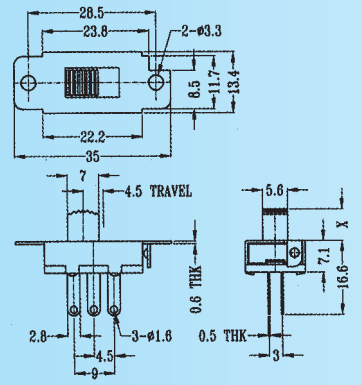

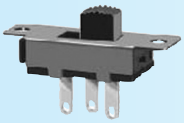

SS-12I01

Rating: 1.5A 250V AC
Function: 1P2T

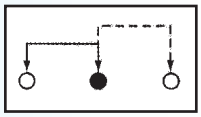

N NON-SHORTING

Optional Knob type

GD					

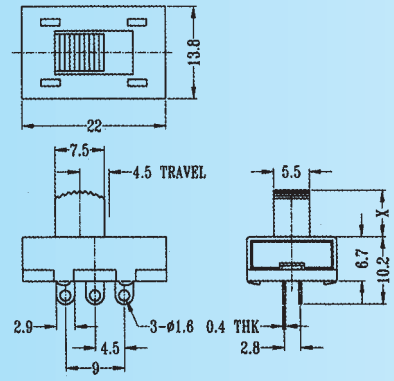

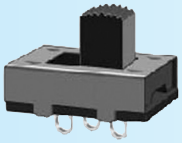

SS-12I04

Rating: 1.5A 250V AC
Function: 1P2T

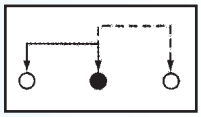

N NON-SHORTING

Optional Knob type

GD					

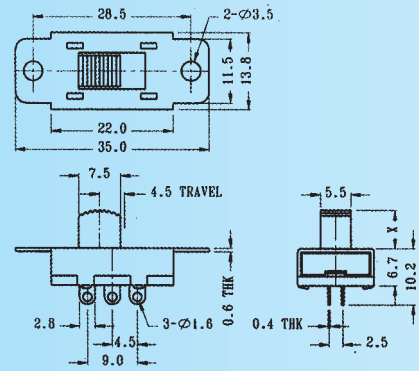

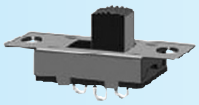

SS-12I05

Rating: 1.5A 250V AC
Function: 1P2T

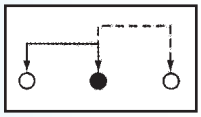

N NON-SHORTING

Optional Knob type

GD					

Digital Electronic Siegfried Lehrer GmbH
Bubesheimer Str. 5 · 89340 Leipheim /Germany · Tel. +49 (0) 8221/708-0 · Fax +49 (0) 8221/708-80