# VERTICAL SLIDE SWITCH

DSL

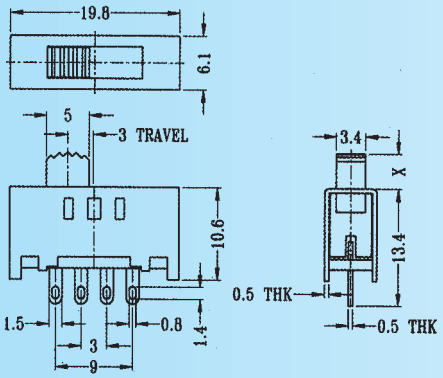


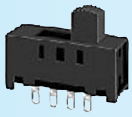

## SS-13F09

Rating: 0.3A 50V DC
Function: 1P3T

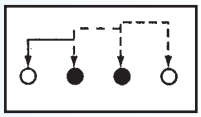

N NON-SHORTING

**Optional Knob type**

| | | | | | |
|---|---|---|---|---|---|
| GD | | | | | |
| | | | | | |

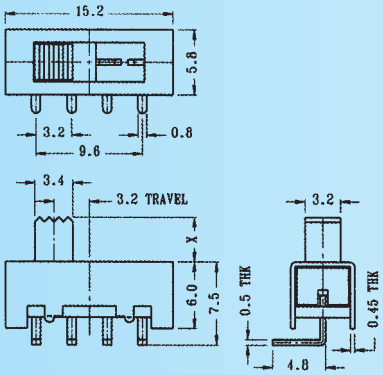


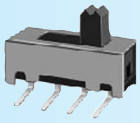

## SS-13F16

Rating: 0.5A 50V DC
Function: 1P3T

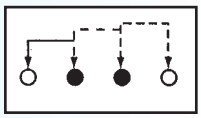

N NON-SHORTING

**Optional Knob type**

| | | | | | |
|---|---|---|---|---|---|
| GE | | | | | |
| | | | | | |

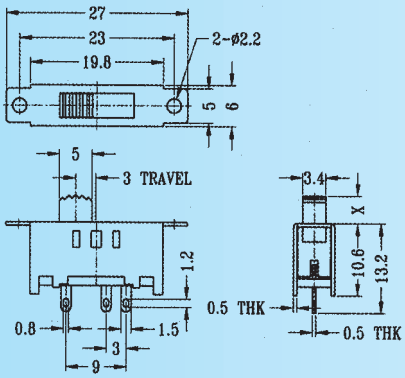


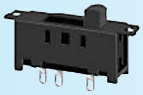

## SS-13F17

Rating: 0.3A 50V DC
Function: 1P3T

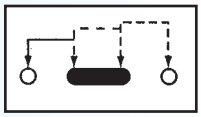

N NON-SHORTING

**Optional Knob type**

| | | | | | |
|---|---|---|---|---|---|
| GD | | | | | |
| | | | | | |

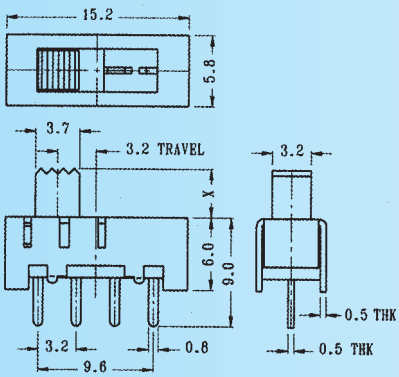


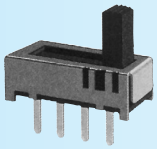

## SS-13F20

Rating: 0.3A 50V DC
Function: 1P3T

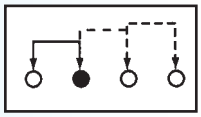

S SHORTING
N NON-SHORTING

**Optional Knob type**

| | | | | | |
|---|---|---|---|---|---|
| GE | | | | | |
| | | | | | |

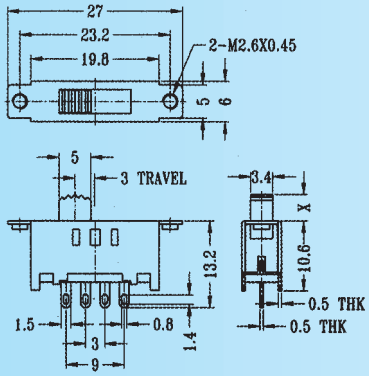


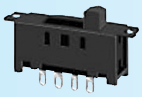

## SS-13F23

Rating: 0.3A 50V DC
Function: 1P3T

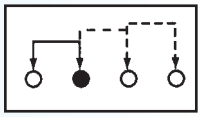

N NON-SHORTING

**Optional Knob type**

| | | | | | |
|---|---|---|---|---|---|
| GD | | | | | |
| | | | | | |

**Digital Electronic Siegfried Lehrer GmbH**
**Bubesheimer Str. 5 · 89340 Leipheim /Germany · Tel. +49 (0) 8221/708-0 · Fax +49 (0) 8221/708-80**