VERTICAL SLIDE SWITCH

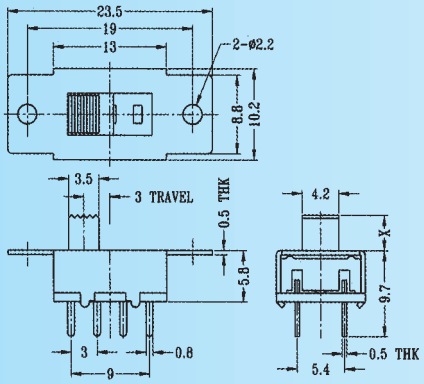

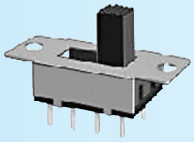

SS-23F24

Rating: 0.3A 50V DC
Function: 2P3T

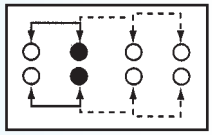

(N) NON-SHORTING

Optional Knob type

GE	NT				

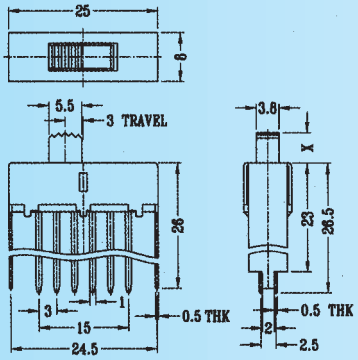

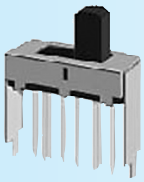

SS-23F25

Rating: 0.5A 50V DC
Function: 2P3T

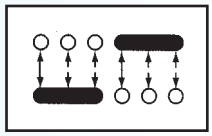

(S) SHORTING

Optional Knob type

MX	TA	GD	NY	AT	GE

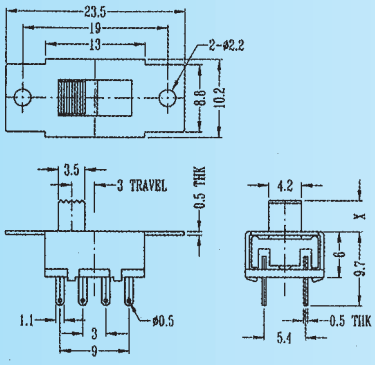

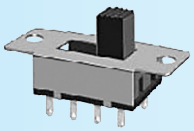

SS-23F26

Rating: 0.3A 50V DC
Function: 2P3T

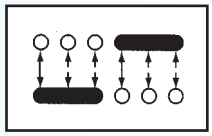

(S) SHORTING

Optional Knob type

GE	NT				

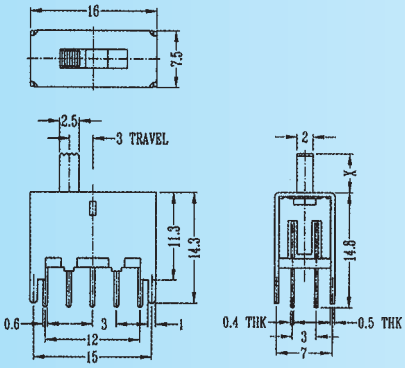

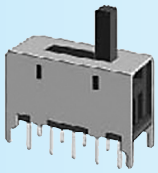

SS-23F31

Rating: 0.3A 50V DC
Function: 2P3T

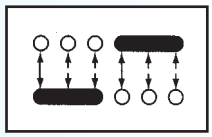

(S) SHORTING

Optional Knob type

GE					

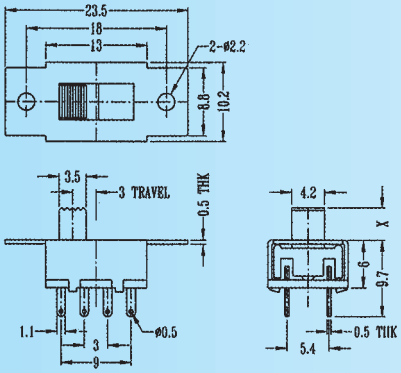

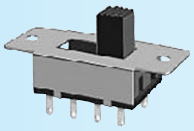

SS-23F33

Rating: 0.3A 50V DC
Function: 2P3T

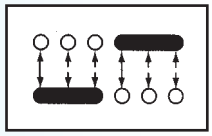

(S) SHORTING

Optional Knob type

GE	NT				

Digital Electronic Siegfried Lehrer GmbH
Bubesheimer Str. 5 · 89340 Leipheim /Germany · Tel. +49 (0) 8221/708-0 · Fax +49 (0) 8221/708-80