VERTICAL SLIDE SWITCH

DSL

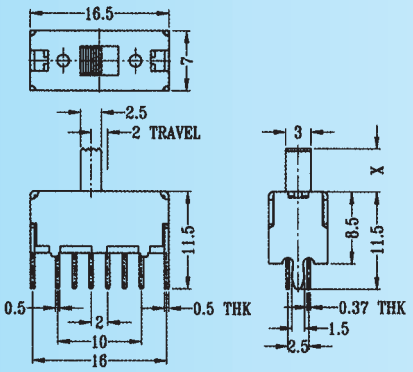

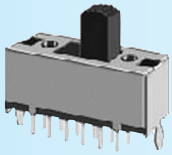

SS-42D04

Rating: 0.3A 50V DC
Function: 4P2T

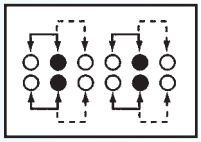

(S) SHORTING

Optional Knob type

GE					

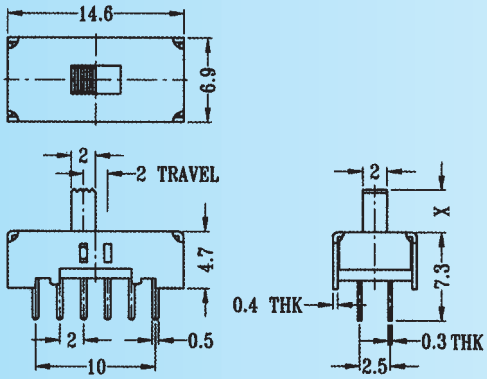

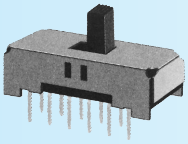

SS-42D13

Rating: 0.3A 50V DC
Function: 4P2T

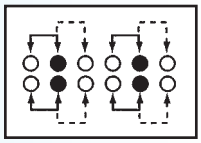

(N) NON-SHORTING

Optional Knob type

GE	VA				

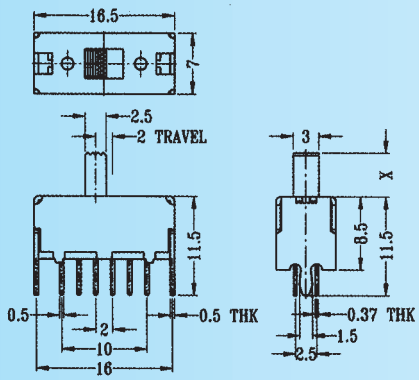

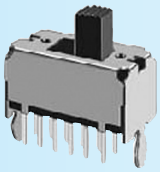

SS-42D24

Rating: 0.3A 50V DC
Function: 4P2T

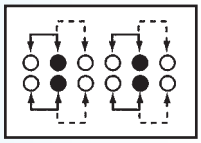

(N) NON-SHORTING

Optional Knob type

GD	MX	AT	NY		

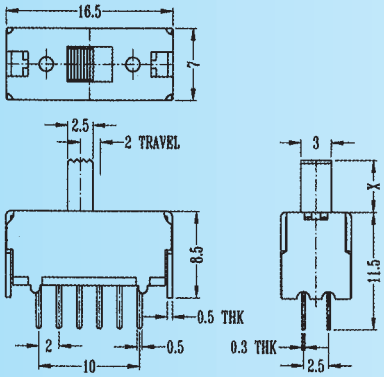

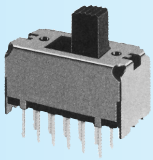

SS-42D25

Rating: 0.3A 50V DC
Function: 4P2T

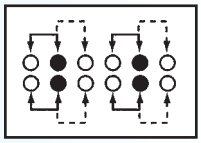

(S) SHORTING
(N) NON-SHORTING

Optional Knob type

GE	VA				

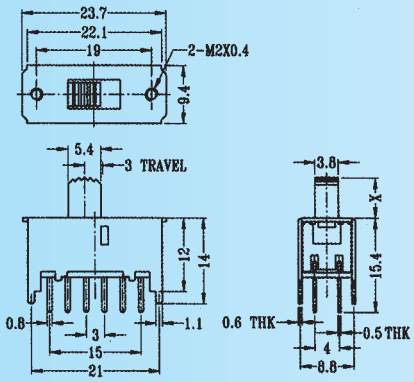

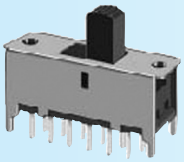

SS-42F01

Rating: 0.3A 50V DC
Function: 4P2T

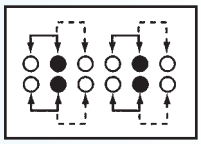

(S) SHORTING

Optional Knob type

GD	MX	AT	NY		

Digital Electronic Siegfried Lehrer GmbH
Bubesheimer Str. 5 · 89340 Leipheim /Germany · Tel. +49 (0) 8221/708-0 · Fax +49 (0) 8221/708-80