PRODUKT-INFO

LT-455 U/W SERIES • LT-450 U/W SERIES
LTM-455 U/W SERIES • LTM-450 U/W SERIES
CERAMIC FILTER FOR COMMUNICATION USE

FEATURES

1. Communication Use.
2. Low Cost.
3. Low Profile.
4. Excellent temperature stability.
5. High Durability.

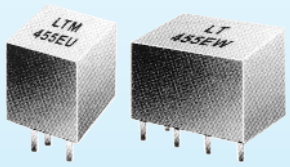

ELECTRICAL SPECIFICATIONS

Model		Center Frequency (kHz)	Insertion Loss, max. (dB)	Pass Band Ripple, max. (dB)	6 dB BAnd Width, min. (kHz)	40 dB Band Width, max. (kHz) LT455...U	50 dB Band Width, max. (kHz) LT455...W	Stop Band Attenuation f0 ±100 kHz, min. (dB) LT455...U	LT455...W	Input/Output Impedance (Ω)
LT455BU/W	LTM455BU/W	455±2.0 450±2.0	4	2	±15	±30	±30	28	40	1500
LT455CU/W	LTM455CU/W	455±2.0 450±2.0	4	2	±12.5	±24	±24	28	40	1500
LT455DU/W	LTM455DU/W	455±1.5 450±1.5	4	2	±10	±20	±20	28	40	1500
LT455EU/W	LTM455EU/W	455±1.5 450±1.5	6	2	±7.5	±15	±15	28	40	1500
LT455FU/W	LTM455FU/W	455±1.5 450±1.5	6	2	±6	±12.5	±12.5	28	40	2000
LT455GU/W	LTM455GU/W	455±1.5 450±1.5	6	2	±4.5	±10	±10	28	40	2000
LT455HU/W	LTM455HU/W	455±1.0 450±1.0	6	2	±3	±9	±9	28	40	2000
LT455IU/W	LTM455IU/W	455±1.0 450±1.0	6	2	±2	±7.5	±7.5	28	40	2000
LT455HTU/W	LTM455HTU/W	455±1.0 450±1.0	6	2	±3	±9	±9	35	60	2000

Dimensions (Units: mm)

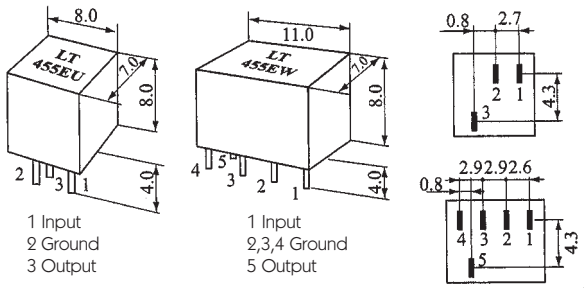

Dimensions (Units: mm)

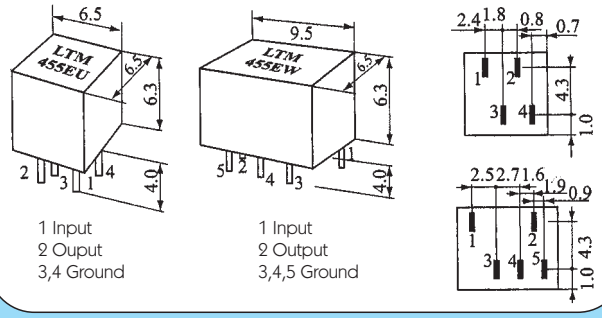

Test Circuit

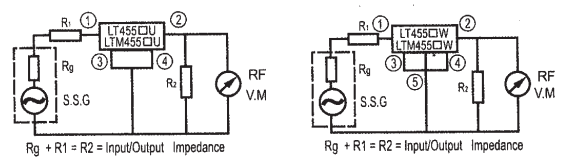

Characteristics

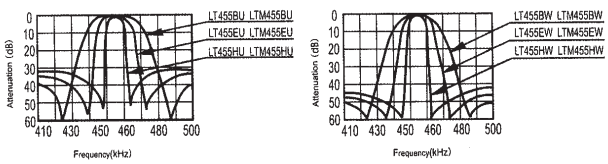

Crystals... and more

Now available

RoHS COMPLIANT 2002/95/EC

digital electronic siegfried lehrer gmbh
Bubesheimer Str. 5
D-89340 Leipheim (Germany)
www.digitallehrer.de
digital@digitallehrer.de

Telefon +49 (0) 82 21 / 7 08 - 0 · Telefax +49 (0) 82 21 / 7 08 - 80

All specifications subject to change without notice.