digital electronic gmbh

LIEFERÜBERSICHT

LCD-DISPLAYS

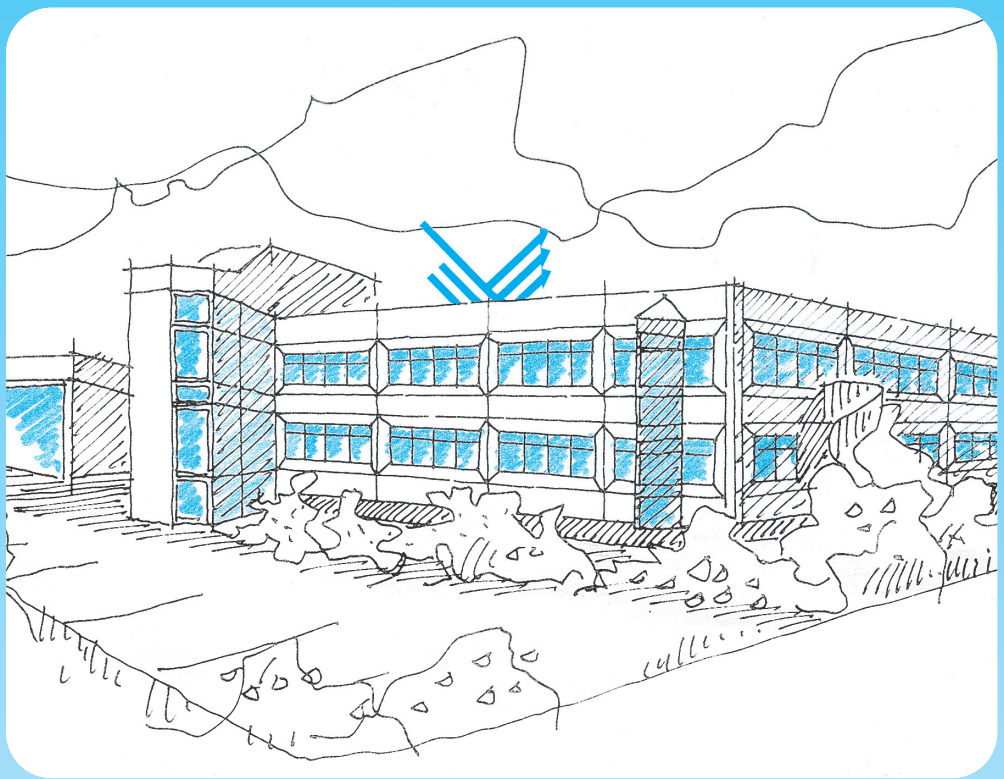

www.digitallehrer.de

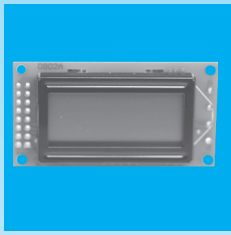

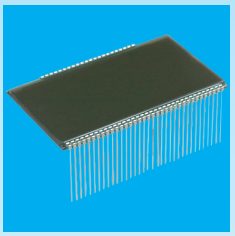

LCD-Displays

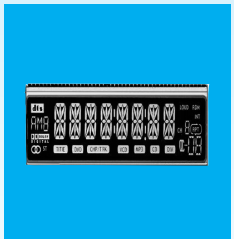

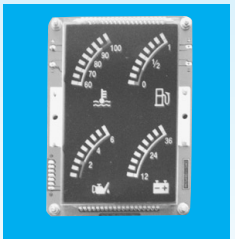

DSL

DSL

CONTENTS

Overview Standard and TFT Modules 3

Basic Specification 4

Standard Character Modules 9

Standard Graphic Modules 30

Standard COG, COF and TAB Modules 59

TFT Transmissive LCD Modules 86

Customer Design LCD-Panels 112

Panel Numbering System 116

Check List 118

STANDARD CHARACTER MODULES

Module Type Series	Module Size, mm	Character, mm	Dot Size, mm	Dot Pitch	V.A., mm	Duty	Backlight						FONT			Page
							TN			STN			Sta.	Euro	Russ.	
	WxHxT (T1)	WxH	WxH	WxH	WxH		None	LED	EL	None	LED	EL				
YMS0801-01	54x37x10	2.9x7.6	0.5x0.6	0.6x0.7	32x16	1/11	▼	▼		▼	▼		▼		▼	9
YMS0802-01	58x32x9/13	2.96x5.56	0.56x0.66	0.6x0.7	38x16	1/16	▼	▼	▼	▼	▼	▼	▼	▼	▼	10
YMS122-01	55.7x32.0x9.8	2.65x5.5	0.45x0.6	0.55x0.7	46.7x17.5	1/16										12-13
YMS161-01	80x36x10/13	3.07x6.56	0.55x0.75	0.63x0.83	64.5x14	1/16	▼	▼		▼	▼		▼		▼	11
YMS161-04	151x40x15	6.0x14.54	1.152x1.765	1.212x1.825	120x23	1/8			▼		▼	▼	▼	▼		14
YMS162-01	80x36x9.5/13	2.95x4.35	0.55x0.5	0.6x0.55	64.5x13.5	1/16	▼	▼		▼	▼		▼	▼	▼	15
YMS162-02	122x44x9.5/14.3	4.84x9.66	0.92x1.1	0.98x1.16	99x24	1/16	▼	▼	▼	▼	▼	▼	▼	▼	▼	16
YMS162-03	67x36x10	2.44x3.94	0.44x0.44	0.49x0.49	52x14	1/16	▼	▼	▼	▼	▼	▼	▼			17
YMS162-04	84x44x10/14.5	2.95x5.55	0.55x0.65	0.6x0.7	61x17	1/16	▼	▼		▼	▼		▼	▼	▼	18
YMS162-10	80x36x9.5/13	2.95x4.35	0.55x0.5	0.6x0.55	64.5x13.5	1/16	▼	▼		▼	▼		▼	▼		19
YMS162-21	53x20x8.5	1.85x3.15	0.33x0.35	0.38x0.4	36x10	1/16		▼		▼	▼		▼			20
YMS162-22	85x36x14.5/9.5	2.96x5.56	0.56x0.66	0.6x0.7	66x16.2	1/16	▼	▼		▼	▼		▼			21
YMS164-01	87x60x9/14	2.95x4.75	0.55x0.55	0.6x0.6	61.8x25.2	1/16	▼	▼	▼	▼	▼		▼			22
YMS202-01	116x37x10/14	3.2x5.55	0.6x0.65	0.65x0.7	83x18.6	1/16	▼	▼		▼	▼		▼	▼	▼	23
YMC202-16	146x43x14/10	4.84x9.22	0.92x1.1	0.98x1.16	123x23	1/16			▼	▼	▼	▼	▼		▼	24
YMS204-01	98x60x9.2/14.2	2.95x4.75	0.55x0.55	0.6x0.6	76x25.2	1/16	▼	▼		▼	▼		▼			25
YMS204-02	146x62.5x13.6/10	4.84x9.22	0.92x1.1	0.98x1.16	123.5x43	1/16	▼	▼		▼	▼		▼	▼		26
YMS242-01	118x36x9.5/14	3.2x5.55	0.6x0.65	0.65x0.7	93.5x15.8	1/16	▼	▼		▼			▼			27
YMS402-01	182x33.5x9.6/13.6	3.2x5.55	0.6x0.65	0.65x0.7	154.4x15.8	1/16	▼	▼		▼			▼			28
YMS404-01	190x54x9.2/14.5	2.8x4.91	0.52x0.57	0.57x0.62	147x29.5	1/16	▼	▼		▼			▼		▼	29

STANDARD GRAPHIC MODULES

Module Type Series	Module Size, mm	Number of dots or pixel	Dot Size, mm	Dot Pitch	V.A., mm	Duty	Backlight				Built-In Controller	Page
							STN					
	WxHxT (T1)	WxH	WxH	WxH	WxH		None	LED	EL	CCFL		
YMS12232-01	84x44x9/14.2	122x32	0.4x0.4	0.44x0.44	60x18.5	1/32	▼	▼			SBN1661G_M18	30-31
YMC12232-03	65.4x30.25x6	122x32	0.4x0.45	0.44x0.49	60.6x20	1/32		▼			SBN1661G_M18	32-33
YMS12864-01	93x70x12.2	128x64	0.48x0.48	0.52x0.52	70.7x38.8	1/64	▼	▼			NT7107	34-35
YMS12864-04	75x52.7x9	128x64	0.4x0.4	0.43x0.43	60.5x33	1/64	▼	▼			NT7107	36-37
YMS128128-01	75x81.2x8.1	128x128	0.4x0.4	0.43x0.43	60x60.1	1/128	▼				NT7107	38-39
YMC160128-01	100x73.4x14.8	160x128	0.425x0.425	0.455x0.455	77x62	1/128		▼			T6963C	40-41
YMC16080-05	120.8x95.89	160x80	0.57x0.625	0.6x0.655	103x80	1/80		▼			HD66421TB0	42-43
YMC192192-01	86x95x9	192x192	0.3x0.3	0.33x0.33	67.4x67.4	1/192		▼			---	44-45
YMS24064-02	180x65x11/13.8	240x64	0.49x0.49	0.53x0.53	134x40.4	1/64	▼	▼	▼		T6963C	46-47
YMS240128-01	144x104x13.8	240x128	0.4x0.4	0.45x0.45	114x64	1/128	▼	▼			T6963C	48-49
YMS240128-02	170x101.5x14	240x128	0.47x0.47	0.5x0.5	128x74	1/128		▼		▼	T6963C	50-51
YMS320240-02	134.5x117x14	320x240	0.27x0.27	0.3x0.3	103x79	1/240	▼	▼			---	52-53
YMS320240-03	144x96.8x12	320x240	0.27x0.27	0.3x0.3	104x79.3	1/240	▼	▼		▼	---	54-55
YMS320240-05	167x109x11	320x240	0.36x0.36	0.33x0.33	122x92	1/240	▼	▼		▼	---	56-58

STANDARD TAB, COG, COF MODULES

Module Type Series	Module Size, mm	Charakter, mm	Number of Dots or Pixel	Dot Size, mm	Dot Pitch	V.A., mm	Duty	Backlight			Built-In Controller	Page
								STN				
	WxHxT (T1)	WxH	WxH	WxH	WxH	WxH		None	LED	EL		
YMS162-08	65x27.7x2.1	2.95x5.15	16x2	0.55x0.6	0.6x0.65	61x15.7	1/16		▼		NT7605H-BD	59
YMS202-04	78.8x27.7x7.8	2.95x5.15	20x2	0.55x0.6	0.6x0.65	74.8x15.7	1/16		▼		NT7605H-BD	60-61
YMS12864-06	70x43x9		128x64	0.39x0.39	0.43x0.43	59x30.5	1/64	▼	▼		ST7565R, NT7538	62-63
YMS12864-15	93.7x53x5.5		128x64	0.48x0.48	0.52x0.52	70.7x38.8	1/65		▼		ST7565R, NT7538	64-65
YMS12864-18	72x90x7		128x64	0.45x0.53	0.465x0.545	66.4x39.4	1/64		▼		SPLC501C	66-67
YMS12864-20	70.2x40.5x5.85		128x64	0.39x0.39	0.43x0.43	59x30.5	1/65		▼		ST7567	68-69
YMS160160-01	54.48x57.9x3.5		160x160	0.245x0.245	0.265x0.265	45.68x45.68	1/160	▼		▼	---	70-71
YMS160160-02	75.5x70.5x10.4		160x160	0.3345x0.3345	0.3545x0.3545	61.5x61.5	1/160		▼		---	72-73
YMC240128-13	98.7x67.7x9.5		240x128	0.325x0.325	0.35x0.35	92x53	1/128		▼		ST7529-G	74-75
YMS320240-10	93.9x71.3x7.9		320x240	0.225x0.2244	0.24x0.2394	79.6x60.5	1/240		▼		---	76-77
YMS320240-11	120.3x69.1x6.5		320x240	0.225x0.225	0.24x0.24	79.8x60.6	1/240		▼		---	78-79
YMS320240-12	158.15x109x7.5		320x240	0.33x0.33	0.36x0.36	121x91.6	1/240		▼		---	80-81
YMC320240-15	60.8x77.3x8.9		320x240	0.185x0.185	0.2x0.2	51.6x67.7	1/240			▼	---	82-83
YMC320240-68	154.6x114.8x9		320x240	0.345x0.345	0.36x0.36	120x90	1/240		▼		IST3225	84-85

TFT TRANSMISSIVE LCD MODULES

Module Type Series	Module Size, mm	Active Area (A/A), mm	Color	Resolution	Size	Backlight	Built-In Controller	Page
	WxHxT	WxH				LED		
YTS240DLAC-03-100N	42.72x59.46x3.1	36.72x48.96	262K	240(RGB)x320	2.4"	▼	HX8347-A	86-87
YTS240DLAC-03-100T	42.72x59.46x4.2	36.72x48.96	262K	240(RGB)x320	2.4"	▼	HX8347-A	88-89
YTS240DLAG-01-102N	42.72x60.26x2.55	36.72x48.96	262K	240(RGB)x320	2.4"	▼	ILI9325D	90-91
YTS280DLAC-03-200N	50x69.2x2.85	44.2x58.6	262K	240(RGB)x320	2.8"	▼	HX8347-A01	92-93
YTS350ELAK-01-100T	77.80x64.5x4.1	70.08x52.56	16M	320(RGB)x240	3.5"	▼	HY8238-D	94-95
YTS350ELAK-01-100N	77.8x64.5x3.04	70.08x52.56	16M	320(RGB)x240	3.5"	▼	HX8238-D	96-97
YTS350ELAJ-01-100T	77.8x64.5x4.04	70.08x52.56	262K	320(RGB)x240	3.5"	▼	SSD2119	98-99
YTC430ILAC-01-100T	105.5x67.2x4.9	95.04x53.86	16M	480(RGB)x272	4.3"	▼ High Brightness	HX8257	100-101
YTS570ELAA-01-100T	126x101.55x6.9	115.2x86.4	16M	320(RGB)x240	5.7"	▼	HX8218&HX8615	102-103
YTS700RLAB-01-100N	165x104.44x5.2	152.4x91.44	16M	800(RGB)x480	7"	▼	HX8262&HX8678	104-105
YTS700RLAB-01-100T	165x104.44x6.6	152.4x91.44	16M	800(RGB)x480	7"	▼	HX8262&HX8678	106-107
YTS700RLAB-02-103N	166.6x109.4x10.0	152.4x91.44	16M	800(RGB)x480	7"	▼ High Brightness	HX8262&HX8678	108-109
YTS800SLAA-01-100T	183x141x7	162x121.5	16M	800(RGB)x600	8"	▼	---	110-111

BASIC SPECIFICATION

LCD-PANEL

TYPE OF DISPLAY

TN Type

Positive mode

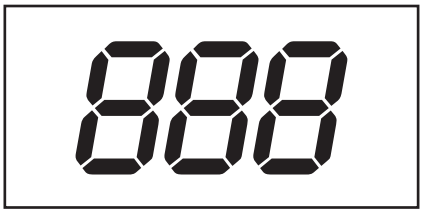

It s necessary to use type under ambient light condition.

Negative mode

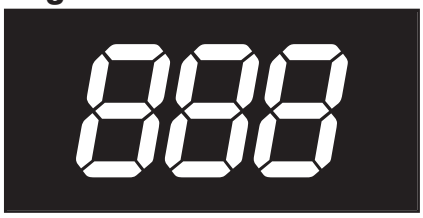

Negaive type is most applicable for backlighting system and is capable of multi-color displaying.

STN Type

Yellow Mode: Dark blue segment on yellow-green background.

Blue Mode: White segment on blue background.

Grey Mode: Nearly black and white display with the combination of yellow mode STN and polarizer.

B/W Mode: Film compensated STN, black and white display

LIGHTING METHODS

Reflective Type

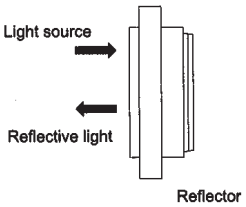

.It is necessary to use type under ambient light condition.

Transflective Type

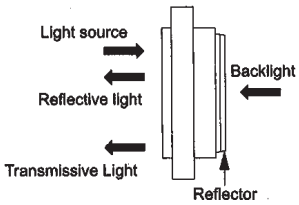

.Ambient light is taken the outside during day and a back-light is used in the dark.

Transmissive Type

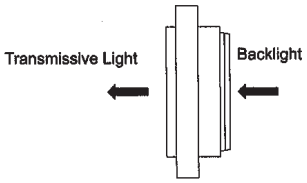

A back light is always used.

CONNECTOR AND LCD MOUNTING METHODS

The following connectors are available for connecting LCD to the drive circuit.

Rubber Connector

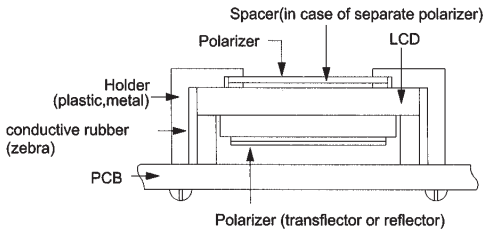

- Structure: Altemate lamination of conductive rubber and insulating rubber.
- Connecting method: Mechanical compression.
- Pitch: min. 0.3 mm

- Easy to assembly.
- Adopted for many years.
- Apllicable even to narrow pads.
- Printed circuit boards need gold plating or graphite coating.

digital electronic gmbh • Tel. +49 (0) 8221/708-0 Fax. +49 (0) 8221/708-80

All specifications subject to change without notice.

BASIC SPECIFICATION

Pin Connector

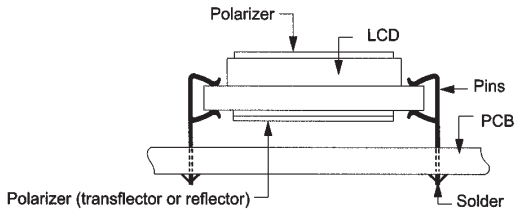

- Structure: Metal pins fit onto the panel terminal pad.
- Connecting method: Soldering.
- Pitch: 1.5, 1.8, 2.0, 2.54 mm

- Suitable for small production runs.

Flexible Connector

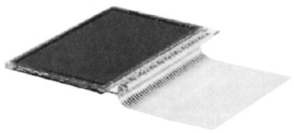

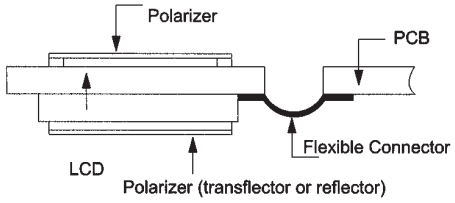

- Structure: Film with electroconductive thin film or printed graphite.
- Connecting method: Heat and pressure fitting, soldering or machanical compression.
- Pitch: Heat Seal: min. 0.4 mm; Soldering: min. 0.8 mm.

- Resin on connecting point.
- Thin structure can be achieved.
- Possible to bend.
- Free trimming possible.

ELECTRO-OPTICAL CHARACTERISTICS

STN TYPE

ITEM	SYMBOL	CONDITION	MIN.	TYP.	MAX.	UNIT	NOTE
Viewing angle	Φ2−Φ1	K=2.0	60	-	-	deg.	1.2
Contrast ratio	K	Φ = 20° Θ = 0	3	10	-	-	3
Response time (rise)	t_r	Φ = 20° Θ = 0	-	200	250	ms	4 4
Response time (fall)	t_f	Φ = 20° Θ = 0	-	200	250	ms	4 4

NOTE 1. Definition of Angle Θ and Φ

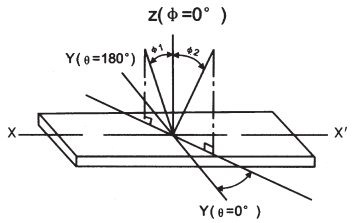

NOTE 2. Definition of Viewing Angle Θ1 and Φ2

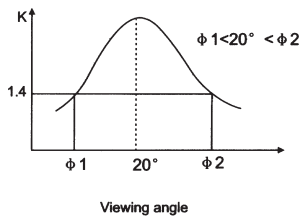

BASIC SPECIFICATION

NOTE 3. Definition of Contrast 'K'

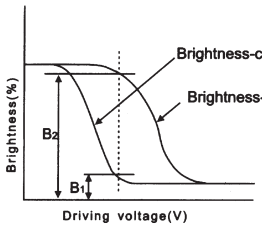

$$K = \frac{\text{Brightness of non-selection dot } (B_2)}{\text{Brightness of selection dot } (B_1)}$$

NOTE 4. Definition of Optical Response

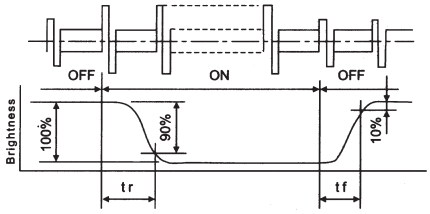

TN TYPE

ITEM	SYMBOL	CONDITION	MIN.	TYP.	MAX.	UNIT	NOTE
Viewing angle	Φ2−Φ1	K=1.4	20	-	-	deg.	1.2
Contrast ratio	K	Φ = 25° Θ = 0	-	3	-	-	3
Response time (rise)	t_r	Φ = 25° Θ = 0	-	150	250	ms	4
Response time (fall)	t_f	Φ = 25° Θ = 0	-	150	250	ms	4

NOTE 1. Definition of Angle Θ and Φ

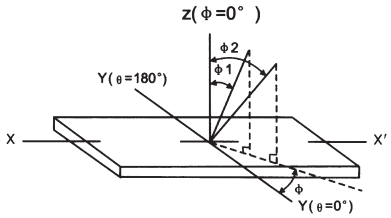

NOTE 2. Definition of Viewing Angle Θ1 and Φ2

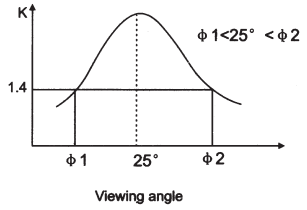

NOTE 3. Definition of Contrast 'K'

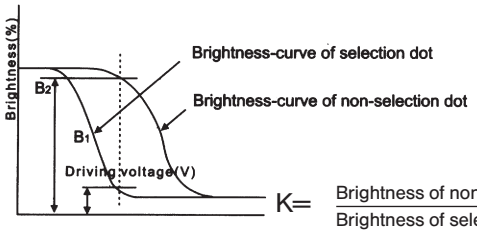

$$K = \frac{\text{Brightness of non-selection dot } (B_2)}{\text{Brightness of selection dot } (B_1)}$$

NOTE 4. Definition of Optical Response

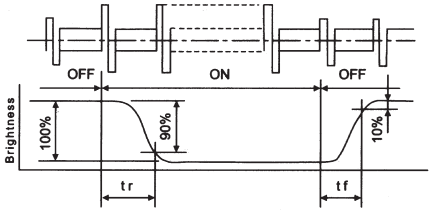

HANDLING LCD PANEL AND MODULE

LCD PANELS are composed of glass and polarizer. Pay attention for:

- Please keep the temperture within specified range for use and storage. Polarization degradation, buble generation or polarizer peel-off may occur with high temperature and high humidity.
- Don´t touch, push or rub the exposed polarizers with anything harder than an HB pencil lead.
- When the display surface becomes dusty, wipe gently with absorbent cotton or other soft material soaked in alcohol. Don´t scrub hard in order to avoid damaging the display surface.
- Wipe off saliva or water drops immediately. Contacting water over a long period of time may cause deformation or color fading.
- After products are tested at low temperatures they must be warmed up in container before they contact room temperature air.
- Don´t put or attach anything on the display area in order to avoid leaving marks on.
- As glass is fragile, it tends to become chipped during handling especially on the edges. Please avoid dropping or jarring.

Storage of LCDs for some years:

- Store them in a dark place, don´t expose to sunlight or fluorescent light. Keep the temperature between 0°C and +35°C.
- The polarizer surface shouldn´t contact any other objects. Please store LCDs in the container in which they were shipped.

Environmental conditions:

- **Humidity** - observe the following conditions both in storage and operation:
  - Ta < +40°C 85%RH or less (Ta - ambient temperature)
  - Ta ≥ +40°C below max. absolute humidity of +40°C 85%RH
- **Exposure to high humidity and temperature:**
  - Don´t leave them for more than 160 hrs. at +60°C
  - Shouldn´t be left for more than 48 hrs. at -20°C.

LCD MODULES Handling:

- Don´t after modify or change the shape of the tab on the metal frame.
- Don´t make extra holes on the printed circuit board, modify its shape or change the positions of components to be attached.
- Don´t damage or modify the pattern wiring on the printed circuit board.
- Absolutely don´t modify the zebra strip (conductive rubber) or touch it with another object.
- Expect for soldering the interface, don´t make any alterations or modifications with a soldering iron.
- Don´t drop, bend or twist LCD Module.

digital electronic gmbh • Tel. +49 (0) 8221/708-0 Fax. +49 (0) 8221/708-80
All specifications subject to change without notice.

BASIC SPECIFICATION

BACKLIGHT CHARACTERISTICS

LED BACKLIGHT

	DIRECT TYPE	SIDE LIGHTGUIDE TYPE
ADVANTAGE	■ DC Signal Operating ■ Long Life Time ■ Wide Useful Driving Temperature ■ Various Color ■ High Brightness	■ DC Signal Operating ■ Long Life Time ■ Wide Useful Driving Temperature ■ Compactness (Thin & Flat)
STRUCTURE	Direct Type 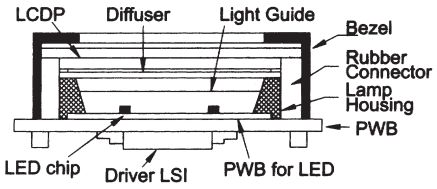	Side Lightguide Type 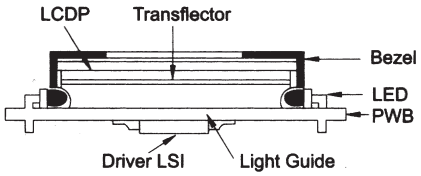
LUMINOUS COLOR	Yellow/Green, Red, Amber	
DRIVING VOLTAGE	DC 4V ~ 8	
THICKNESS OF HOUSING UNIT MIN.	Direct Type: 5.0 mm	Side Type: 1.0 mm
LIFE TIME	50.000 hours	

EL BACKLIGHT

ADVANTAGE	■ Compactness (Thin & Flat) ■ High Uniformity	■ High Uniformity ■ Easy to Design
STRUCTURE	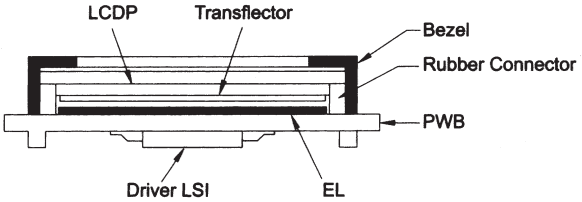	
LUMINOUS COLOR	White, Blue/Green	
DRIVING VOLTAGE	AC 100V ~ 130V, 400 Hz ~ 1 KHz, (DC/AC Inverter is necessary)	
THICKNESS OF HOUSING UNIT MIN.	0.3 mm	
LIFE TIME	2.000 ~ 50.000 hours	

CCFL BACKLIGHT

ADVANTAGE	■ High Brightness ■ High Uniformity	■ Easy to Design Large Size ■ Useful to Color LCD
STRUCTURE	Direct Type 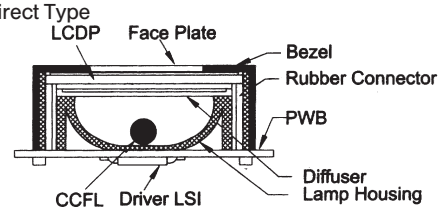	Side Lightguide Type 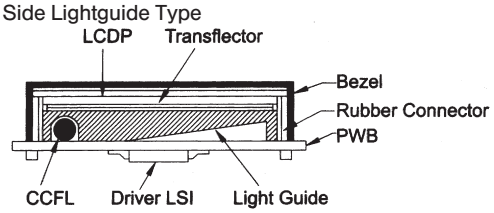
LUMINOUS COLOR	White	
DRIVING VOLTAGE	AC 200V ~ 400V, 30 Hz ~ 50 Hz, (DC/AC Inverter is necessary)	
THICKNESS OF HOUSING UNIT MIN.	Direct Type: 10.0 mm	Side Type: 3.5 mm
LIFE TIME	10.000 ~ 20.000 hours	

BASIC SPECIFICATION

TEMPERATURE CHARACTERISTICS

MODEL		OPERATING TEMP.	STORAGE TEMP.
TN	STANDARD	0 °C ~ + 50 °C	- 10 °C ~ + 60 °C
	HIGH RELIABILITY	- 10 °C ~ + 60 °C	- 30 °C ~ + 85 °C
STN	STANDARD	0 °C ~ + 50 °C	- 10 °C ~ + 60 °C
	HIGH RELIABILITY	- 10 °C ~ + 60 °C	- 30 °C ~ + 85 °C
FSTN (BLACK & WHITE)	STANDARD	0 °C ~ + 50 °C	- 10 °C ~ + 60 °C
	HIGH RELIABILITY	- 10 °C ~ + 60 °C	- 30 °C ~ + 85 °C

Except Backlight Unit.

POWER SUPPLY SCHEMATICS

SINGLE SOURCE

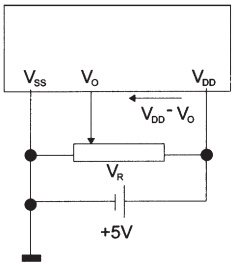

V_{DD} - V_O: LCD Driving Voltage
V_R: 10k - 20k

DOUBLE SOURCE

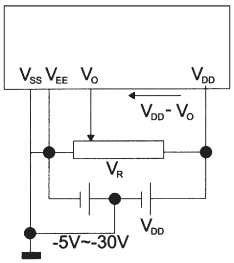

V_{DD} - V_O: LCD Driving Voltage
V_R: 10k - 20k

NEGATIVE POWER SUPPLIER INCLUDED

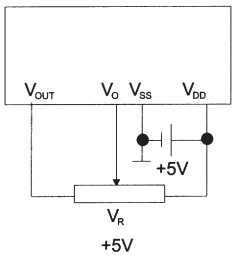

V_{DD} - V_O: LCD Driving Voltage
V_R: 10k - 20k

digital electronic gmbh • Tel. +49 (0) 8221/708-0 Fax. +49 (0) 8221/708-80
All specifications subject to change without notice.

STANDARD CHARACTER MODULES

YMS 0801-01

8 CHAR x 1 LINE, 1/11 DUTY, 1/4 BIAS

EXTERNAL DIMENSION AND DISPLAY PATTERN

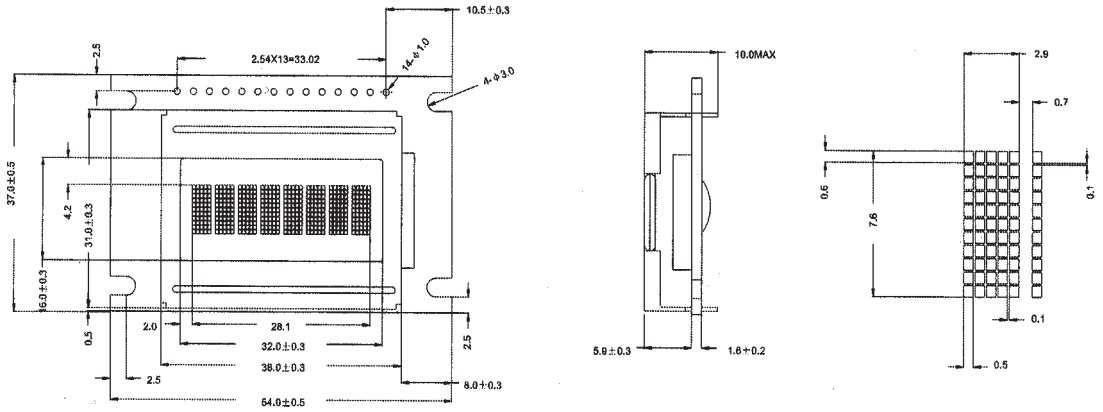

MECHANICAL DATA

ITEM	SPECIFICATION	UNIT
Module Size (W x H x T)	54.0 x 37.0 x 10.0	mm
Viewing Area (W x H)	32.0 x 16.0	mm
Character Font (W x H)	5.0 x 10.0 with cursor	dots
Character Size (W x H)	2.9 x 7.6	mm
Dot Size (W x H)	0.50 x 0.60	mm

ABSOLUTE MAXIMUM RATINGS

PARAMETER	SYMBOL	MIN.	MAX.	UNIT
Supply Voltage Logic	V_{DD} - V_{SS}	-0.3	7.0	V
Supply Voltage Drive	V_{DD} - V_{EE}	-0.3	13.5	V
Input Voltage	V_{IN}	-0.3	V_{DD} +0.3	V
Operating Temperature	See page 8			
Storage Temperature				

PIN CONFIGURATION

PIN	SYMBOL	SIGNAL DESCRIPTION
1	V_{SS}	GND (0 V)
2	V_{DD}	Power Supply (+5.0V)
3	V_{EE}	Voltage Control for LCD
4	RS	Register Select – LOW = Instruction, HIGH=DATA
5	R/W	Read / Write LOW = MPU to LCM, HIGH = LCM to MPU
6	E	Enable R/W = LOW: Data are talking over at falling edge R/W = HIGH: Data can be read at E = 1
7 to 14	DB_0 to DB_7	Data Bus – Software selectable 4 or 8 bit Mode

ELECTRICAL CHARACTERISTICS, Ta = 25°C

ITEM		SYMBOL	CONDITION	SPEC. VALUE			UNIT
				MIN.	TYP.	MAX.	
Supply Voltage (Logic)		V_{DD} - V_{SS}		4.5	5.0	5.5	V
Supply Current (Logic)		I_{DD}	V_{DD} =5V		0.8	2.0	mA
Input Voltage	HIGH	V_{IH}		2.2		V_{DD}	V
	LOW	V_{IL}		-0.3		0.6	V
Output Voltage	HIGH	V_{OH}	I_{OH}=0.2mA	2.4			V
	LOW	V_{OL}	I_{OL}=1.2mA			0.4	V
LCD Operating Voltage		V_{DD} - V_{EE}	V_{DD} =5V Ta=+25°C		4.2	4.7	V
Supply Current LCD Drive		I_{EE}			1.0	1.5	mA

Note (1): Value is high reliability type. Note (2):Electro-Optical Characteristics: See page 5.

BLOCK DIAGRAM

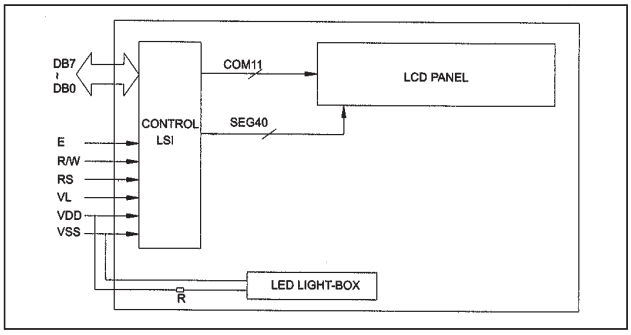

BACKLIGHTING CHARACTERISTICS, Ta = 25°C, LED

ITEM	SYMBOL	CONDITION	SPEC. VALUE			UNIT
			MIN.	TYP.	MAX.	
Supply Voltage	V_{LED}		3.0	3.2	3.5	V
Power Consumption	P_{LED}				140	mW

STANDARD CHARACTER MODULES

YMS 0802-01

8 CHAR x 2 LINE, 1/16 DUTY, 1/5 BIAS

EXTERNAL DIMENSION AND DISPLAY PATTERN

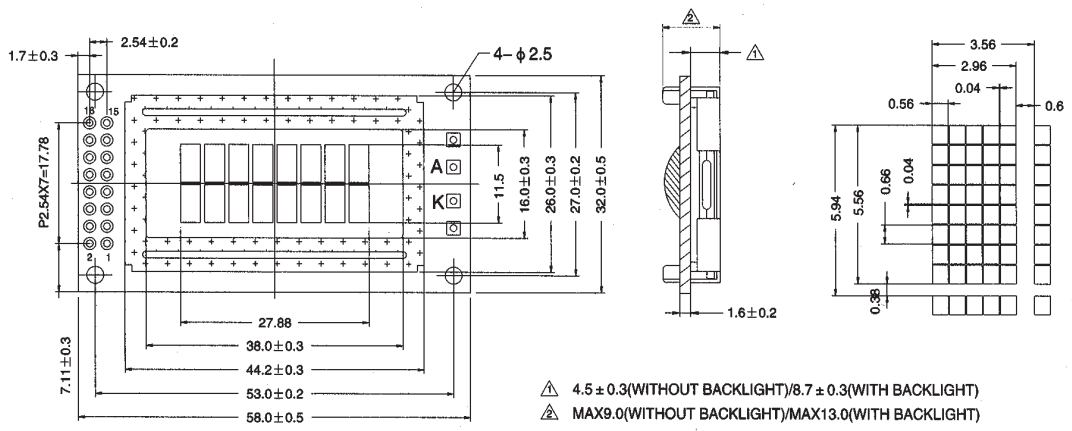

MECHANICAL DATA

ITEM	SPECIFICATION	UNIT
Module Size (W x H x T)	58.0 x 32.0 x 9.0/13.0	mm
Viewing Area (W x H)	38.0 x 16.0	mm
Character Font (W x H)	5.0 x 7.0 with cursor	dots
Character Size (W x H)	2.96 x 5.56	mm
Character Pitch (W x H)	3.56 x 5.94	mm
Dot Size (W x H)	0.56 x 0.66	mm

ABSOLUTE MAXIMUM RATINGS

PARAMETER	SYMBOL	MIN.	MAX.	UNIT
Supply Voltage Logic	V_{DD} - V_{SS}	-0.3	7.0	V
Supply Voltage Drive	V_{DD} - V_{EE}	-0.3	13.5	V
Input Voltage	V_{IN}	-0.3	V_{DD} +0.3	V
Operating Temperature	See page 8			
Storage Temperature				

PIN CONFIGURATION

PIN	SYMBOL	SIGNAL DESCRIPTION
1	V_{SS}	GND (0 V)
2	V_{DD}	Power Supply (+5.0V)
3	V_{EE}	Supply Voltage LCD Driver
4	RS	Register Select – LOW = Instruction, HIGH=DATA
5	R/W	Read / Write LOW = MPU to LCM, HIGH = LCM to MPU
6	E	Enable R/W = LOW: Data are talking over at falling edge R/W = HIGH: Data can be read at E = 1
7 to 14	DB_0 to DB_7	Data Bus – Software selectable 4 or 8 bit Mode
15	A	Anode of LED Unit
16	K	Cathode of LED Unit

ELECTRICAL CHARACTERISTICS, Ta = 25°C

ITEM		SYMBOL	CONDITION	SPEC. VALUE			UNIT
				MIN.	TYP.	MAX.	
Supply Voltage (Logic)		V_{DD} - V_{SS}		4.5	5.0	5.5	V
Supply Current (Logic)		I_{DD}	V_{DD} =5V		0.8	2.0	mA
Input Voltage	HIGH	V_{IH}		2.2		V_{DD}	V
	LOW	V_{IL}		-0.3		0.6	V
Output Voltage	HIGH	V_{OH}	I_{OH}=0.2mA	2.4			V
	LOW	V_{OL}	I_{OL}=1.2mA			0.4	V
LCD Operating Voltage		V_{DD} - V_{EE}	V_{DD} =5V Ta=+25°C	4.5	4.7	5.0	V
Supply Current LCD Drive		I_{EE}			1.0	1.5	mA

Note (1): Value is high reliability type. Note (2): Electro-Optical Characteristics: See page 5.

BLOCK DIAGRAM

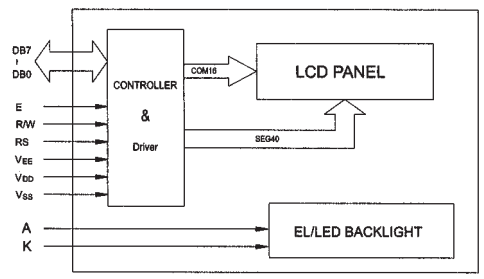

BACKLIGHTING CHARACTERISTICS, Ta = 25°C, LED

ITEM	SYMBOL	CONDITION	SPEC. VALUE			UNIT
			MIN.	TYP.	MAX.	
Supply Voltage	V_{LED}		3.8	4.0	4.2	V
Power Consumption	P_{LED}	I_F=60mA		240	600	mW
Luminous	I_V	I_F=60mA	82	103		cd / m^2

digital electronic gmbh • Tel. +49 (0) 8221/708-0 Fax. +49 (0) 8221/708-80

All specifications subject to change without notice.

STANDARD CHARACTER MODULES

YMS 161-01

16 CHAR x 1 LINE, 1/16 DUTY, 1/5 BIAS

EXTERNAL DIMENSION AND DISPLAY PATTERN

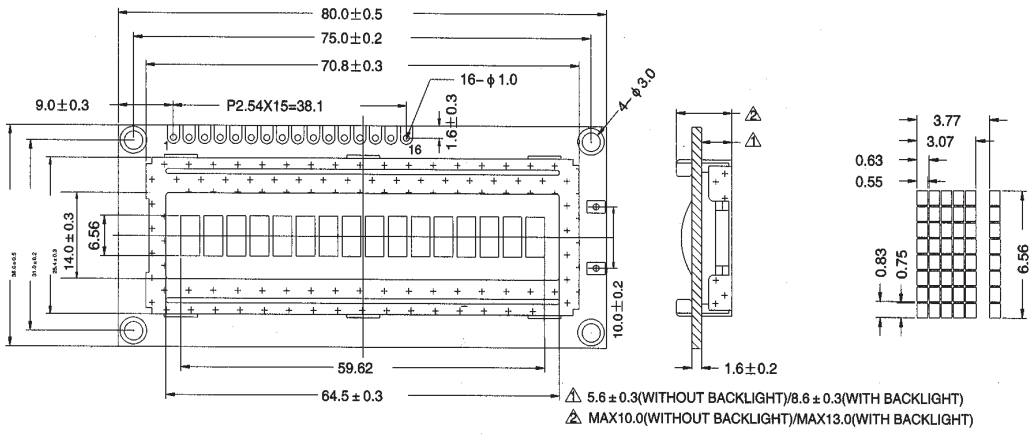

MECHANICAL DATA

ITEM	SPECIFICATION	UNIT
Module Size (W x H x T)	80.0 x 36.0 x 10.0/13.0	mm
Viewing Area (W x H)	64.5 x 14.0	mm
Character Font (W x H)	5.0 x 7.0 with cursor	dots
Character Size (W x H)	3.07 x 6.56	mm
Character Pitch (W x H)	3.77	mm
Dot Size (W x H)	0.55 x 0.75	mm

ABSOLUTE MAXIMUM RATINGS

PARAMETER	SYMBOL	MIN.	MAX.	UNIT
Supply Voltage Logic	V_{DD} - V_{SS}	-0.3	7.0	V
Supply Voltage Drive	V_{DD} - V_{EE}	-0.3	13.5	V
Input Voltage	V_{IN}	-0.3	V_{DD} +0.3	V
Operating Temperature	See page 8			
Storage Temperature				

PIN CONFIGURATION

PIN	SYMBOL	SIGNAL DESCRIPTION
1	V_{SS}	GND (0 V)
2	V_{DD}	Power Supply (+5.0V)
3	V_{EE}	Supply Voltage LCD Driver
4	RS	Register Select – LOW = Instruction, HIGH=DATA
5	R/W	Read / Write LOW = MPU to LCM, HIGH = LCM to MPU
6	E	Enable R/W = LOW: Data are talking over at falling edge R/W = HIGH: Data can be read at E = 1
7 to 14	DB_0 to DB_7	Data Bus – Software selectable 4 or 8 bit Mode
15	A	Anode of LED Unit
16	K	Cathode of LED Unit

ELECTRICAL CHARACTERISTICS, Ta = 25°C

ITEM		SYMBOL	CONDITION	SPEC. VALUE			UNIT
				MIN.	TYP.	MAX.	
Supply Voltage (Logic)		V_{DD} - V_{SS}		4.5	5.0	5.5	V
Supply Current (Logic)		I_{DD}	V_{DD} =5V		0.8	2.0	mA
Input Voltage	HIGH	V_{IH}		2.2		V_{DD}	V
	LOW	V_{IL}		-0.3		0.6	V
Output Voltage	HIGH	V_{OH}	I_{OH}=0.2mA	2.4			V
	LOW	V_{OL}	I_{OL}=1.2mA			0.4	V
LCD Operating Voltage		V_{DD} - V_{EE}	V_{DD} =5V Ta=+25°C	4.5	4.7	5.0	V
Supply Current LCD Drive		I_{EE}			1.0	1.5	mA

Note (1): ( )Value is high reliability type. Note (2):Electro-Optical Characteristics: See page 5.

BLOCK DIAGRAM

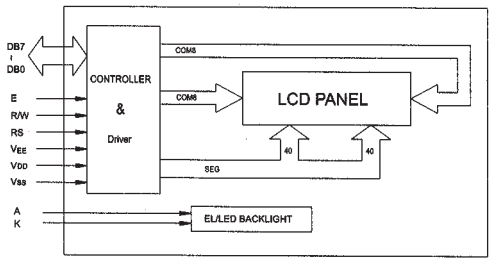

BACKLIGHTING CHARACTERISTICS, Ta = 25°C, LED

ITEM	SYMBOL	CONDITION	SPEC. VALUE			UNIT
			MIN.	TYP.	MAX.	
Supply Voltage	V_{LED}			4.2	4.6	V
Power Consumption	P_{LED}	I_F=90mA		380		mW
Luminous	I_V	I_F=90mA		200		cd/m²

STANDARD CHARACTER MODULES

YMS 122-01

12 CHAR x 2 LINE, 1/16 DUTY, 1/5 BIAS

EXTERNAL DIMENSION AND DISPLAY PATTERN

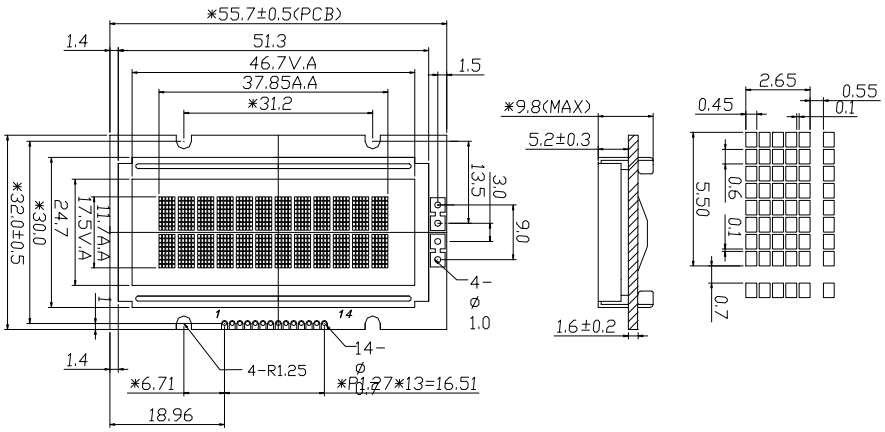

MECHANICAL DATA

ITEM	SPECIFICATION	UNIT
Module Size (W x H x T)	55.7 x 32.0 x 9.8	mm
Viewing Area (W x H)	46.7 x 17.5	mm
Character Size (W x H)	2.65 x 5.55	mm
Character Pitch (W x H)	3.2 x 6.2	mm
Dot Size (W x H)	0.45 x 0.6	mm

ABSOLUTE MAXIMUM RATINGS

PARAMETER	SYMBOL	MIN.	MAX.	UNIT
Supply Voltage Logic	V_{DD} - V_{SS}	-0.3	7.0	V
Supply Voltage Drive	V_{DD} - V_{EE}	V_{DD} -10	V_{DD} +0.3	V
Input Voltage	V_{IN}	-0.3	V_{DD} +0.3	V
Operating Temperature	See page 8			
Storage Temperature				

PIN CONFIGURATION

PIN	SYMBOL	SIGNAL DESCRIPTION
1	V_{SS}	GND (0 V)
2	V_{DD}	Logic Supply Voltage (+5.0V)
3	V_L	LCD Driver Voltage Input
4	RS	DATA / Instruction Register Select
5	R/W	Read / Write Select
6	E	Enable Signal
7 to 14	DB_0 to DB_7	Data Bus Line

ELECTRICAL CHARACTERISTICS, Ta = 23°C ±3°C

ITEM		SYMBOL	CONDITION	SPEC. VALUE			UNIT
				MIN.	TYP.	MAX.	
Supply Voltage (Logic)		V_{DD} - V_{SS}			5.0		V
LCD Operating Voltage		V_{DD} - V_0	V_{DD} =5V Ta=+25°C	4.3	4.5	4.7	V
Response Time		T_{ON} T_{OFF}			94 230		ms
Contrast		CR		2.0			
Viewing Angle	12H	θ1	CR ≥ 2.0		50		Deg.
	6H	θ2			69		
	3H	θ3			55		
	9H	θ4			55		

Note (1): Value is high reliability type. Note (2): Electro-Optical Characteristics: See page 5.

BLOCK DIAGRAM

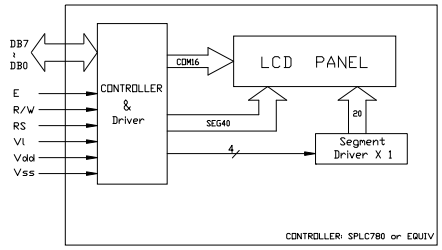

PIN NO.	1	2	3	4	5	6	7	8	9	10	11	12	13	14
SYMBOL	Vss	Vdd	Vl	RS	R/W	E	DB0	DB1	DB2	DB3	DB4	DB5	DB6	DB7

digital electronic gmbh • Tel. +49 (0) 8221/708-0 Fax. +49 (0) 8221/708-80

All specifications subject to change without notice.

STANDARD CHARACTER MODULES

YMS 122-01

12 CHAR x 2 LINE, 1/16 DUTY, 1/5 BIAS

INTERFACE TIMING CHARACTERISTICS

Write Mode Timing Diagram (Writing Data from MPU to SPLC780D1)

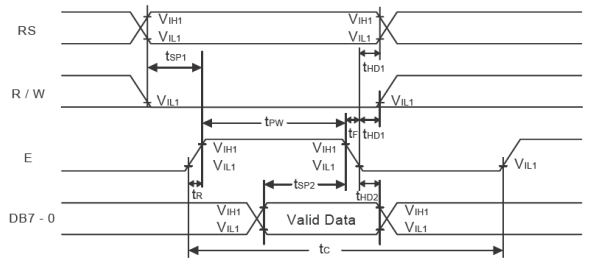

Write Operation (Writing Data from MPU to SPLC780D1)					
PARAMETER	SYMBOL	TEST CONDITIONS	MIN.	MAX.	UNIT
E Cycle Time	t_C	Pin E	400		ns
E Pulse Width	t_W	Pin E	150		ns
E Rise / Fall Time	t_R, t_F	Pin E		25	ns
Address Setup Time	t_{SP1}	Pins: RS, R/W, E	30		ns
Address Hold Time	t_{HD1}	Pins: RS, R/W, E	10		ns
Data Output Delay Time	t_D	Pins: DB_0-DB_7	40		ns
Data Hold Time	t_{HD2}	Pins: DB_0-DB_7	10		ns

Read Mode Timing Digrm (Reading Data from SPLC780D1 to MPU)

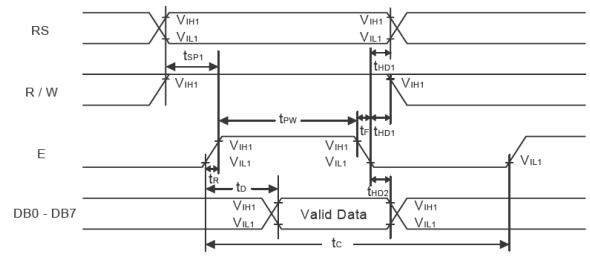

Read Operation (Writing Data from SPLC780D1 to MPU)					
PARAMETER	SYMBOL	TEST CONDITIONS	MIN.	MAX.	UNIT
E Cycle Time	t_C	Pin E	400		ns
E Pulse Width	t_W	Pin E	150		ns
E Rise / Fall Time	t_R, t_F	Pin E		25	ns
Address Setup Time	t_{SP1}	Pins: RS, R/W, E	30		ns
Address Hold Time	t_{HD1}	Pins: RS, R/W, E	10		ns
Data Output Delay Time	t_D	Pins: DB_0-DB_7		100	ns
Data Hold Time	t_{HD2}	Pins: DB_0-DB_7	5		ns

STANDARD CHARACTER MODULES

YMS 161-04

16 CHAR x 1 LINE, 1/8 DUTY, 1/4 BIAS

EXTERNAL DIMENSION AND DISPLAY PATTERN

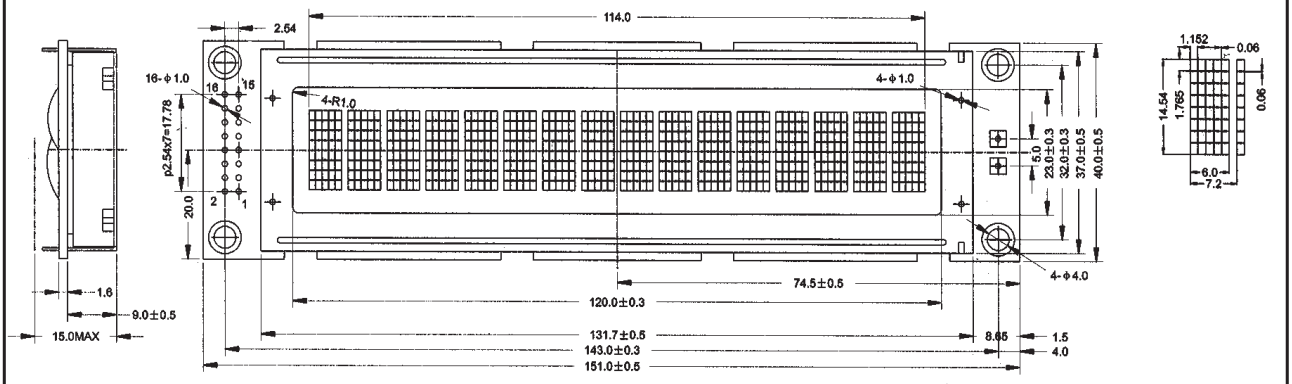

MECHANICAL DATA

ITEM	SPECIFICATION	UNIT
Module Size (W x H x T)	151.0 x 40.0 x 15.0	mm
Viewing Area (W x H)	120.0 x 23.0	mm
Character Font (W x H)	5.0 x 7.0 with cursor	dots
Character Size (W x H)	6.0 x 14.54	mm
Dot Size (W x H)	1.152 x 1.765	mm

ABSOLUTE MAXIMUM RATINGS

PARAMETER	SYMBOL	MIN.	MAX.	UNIT
Supply Voltage Logic	V_{DD} - V_{SS}	-0.3	7.0	V
Supply Voltage Drive	V_{DD} - V_{EE}	-0.3	13.5	V
Input Voltage	V_{IN}	-0.3	V_{DD} +0.3	V
Operating Temperature	See page 8			
Storage Temperature				

PIN CONFIGURATION

PIN	SYMBOL	SIGNAL DESCRIPTION
1	V_{SS}	GND (0 V)
2	V_{DD}	Logic Supply Voltage (+5.0V)
3	V_{EE}	LCD Driver Voltage Input
4	RS	DATA / Instruction Register Select
5	R/W	Read / Write Select
6	E	Enable Signal
7 to 14	DB_0 to DB_7	Data Bus Line
15	A, K	LED Backlight
16		

ELECTRICAL CHARACTERISTICS, Ta=25°C

ITEM		SYMBOL	CONDITION	SPEC. VALUE			UNIT
				MIN.	TYP.	MAX.	
Supply Voltage (Logic)		V_{DD} - V_{SS}		4.5	5.0	5.5	V
Supply Current (Logic)		I_{DD}	V_{DD} =5V		1.13		mA
Input Voltage	HIGH	V_{IH}		0.7 V_{DD}		V_{DD}	V
	LOW	V_{IL}		-0.3		0.05	V
Output Voltage	HIGH	V_{OH}	V_{OH} =1.2mA	0.8 V_{DD}			V
	LOW	V_{OL}	V_{OL} =1.2mA			0.2 V_{DD}	V
LCD Operating Voltage		V_{DD} - V_{EE}	V_{DD} =5V Ta=+25°C	3.0	5.6	9.0	V
Supply Current LCD Drive		I_{EE}			1.0		mA

Note (1): Value is high reliability type. Note (2): Electro-Optical Characteristics: See page 5.

BLOCK DIAGRAM

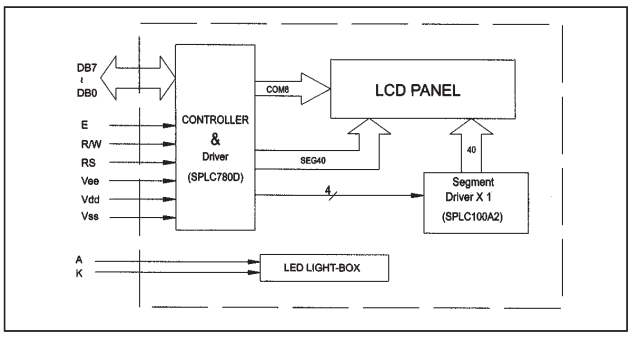

BACKLIGHTING CHARACTERISTICS, Ta=25°C, LED

ITEM	SYMBOL	CONDITION	SPEC. VALUE			UNIT
			MIN.	TYP.	MAX.	
Supply Voltage	V_{LED}	I_F=300mA	3.8	4.1	4.2	V
Power Consumption	P_{LED}			1230		mW
Luminous	I_V					cd/m^2

digital electronic gmbh • Tel. +49 (0) 8221/708-0 Fax. +49 (0) 8221/708-80

All specifications subject to change without notice.

STANDARD CHARACTER MODULES

YMS 162-01

16 CHAR x 2 LINE, 1/16 DUTY, 1/5 BIAS

EXTERNAL DIMENSION AND DISPLAY PATTERN

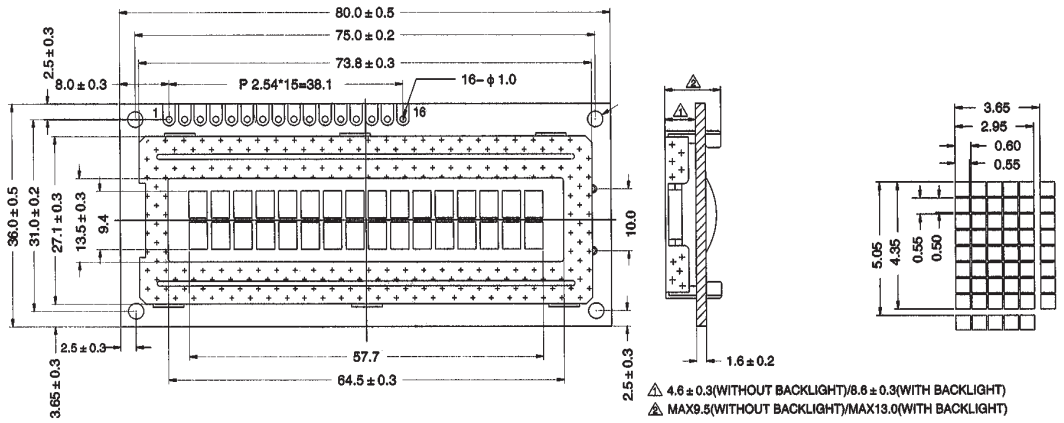

MECHANICAL DATA

ITEM	SPECIFICATION	UNIT
Module Size (W x H x T)	80.0 x 36.0 x 9.5/13.0	mm
Viewing Area (W x H)	64.5 x 13.5	mm
Character Font (W x H)	5.0 x 7.0 with cursor	dots
Character Size (W x H)	2.95 x 4.35	mm
Character Pitch (W x H)	3.65 x 5.05	mm
Dot Size (W x H)	0.55 x 0.5	mm

ABSOLUTE MAXIMUM RATINGS

PARAMETER	SYMBOL	MIN.	MAX.	UNIT
Supply Voltage Logic	V_{DD} - V_{SS}	-0.3	7.0	V
Supply Voltage Drive	V_{DD} - V_{EE}	-0.3	13.5	V
Input Voltage	V_{IN}	-0.3	V_{DD} +0.3	V
Operating Temperature	See page 8			
Storage Temperature				

PIN CONFIGURATION

PIN	SYMBOL	SIGNAL DESCRIPTION
1	V_{SS}	GND (0 V)
2	V_{DD}	Power Supply (+5.0V)
3	V_{EE}	Supply Voltage LCD Driver
4	RS	Register Select – LOW = Instruction, HIGH=DATA
5	R/W	Read / Write LOW = MPU to LCM, HIGH = LCM to MPU
6	E	Enable R/W = LOW: Data are talking over at falling edge R/W = HIGH: Data can be read at E = 1
7 to 14	DB_0 to DB_7	Data Bus – Software selectable 4 or 8 bit Mode
15	A	Anode of LED Unit
16	K	Cathode of LED Unit

ELECTRICAL CHARACTERISTICS, Ta = 25°C

ITEM		SYMBOL	CONDITION	SPEC. VALUE			UNIT
				MIN.	TYP.	MAX.	
Supply Voltage (Logic)		V_{DD} - V_{SS}		4.5	5.0	5.5	V
Supply Current (Logic)		I_{DD}	V_{DD} =5V		0.8	2.0	mA
Input Voltage	HIGH	V_{IH}		2.2		V_{DD}	V
	LOW	V_{IL}		-0.3		0.6	V
Output Voltage	HIGH	V_{OH}	I_{OH}=0.2mA	2.4			V
	LOW	V_{OL}	I_{OL}=1.2mA			0.4	V
LCD Operating Voltage		V_{DD} - V_{EE}	V_{DD} =5V Ta=+25°C	4.5	4.7	5.0	V
Supply Current LCD Drive		I_{EE}			1.0	1.5	mA

Note (1): Value is high reliability type. Note (2):Electro-Optical Characteristics: See page 5.

BLOCK DIAGRAM

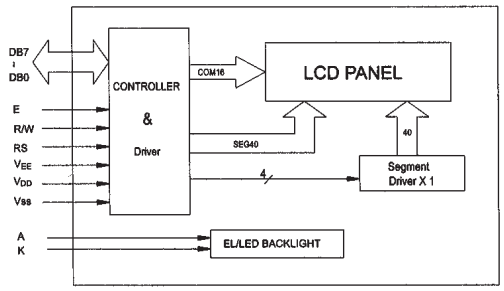

BACKLIGHTING CHARACTERISTICS, Ta = 25°C, LED

ITEM	SYMBOL	CONDITION	SPEC. VALUE			UNIT
			MIN.	TYP.	MAX.	
Supply Voltage	V_{LED}			4.2	4.6	V
Power Consumption	P_{LED}	I_F=90mA		380		mW
Luminous	I_V	I_F=90mA		200		cd/m²

STANDARD CHARACTER MODULES

YMS 162-02

16 CHAR x 2 LINE, 1/16 DUTY, 1/5 BIAS

EXTERNAL DIMENSION AND DISPLAY PATTERN

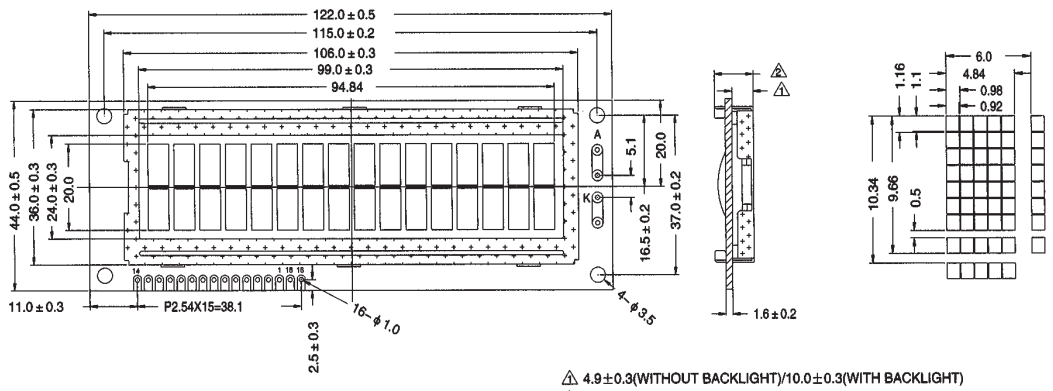

MECHANICAL DATA

ITEM	SPECIFICATION	UNIT
Module Size (W x H x T)	122.0 x 44.0 x 9.5/14.3	mm
Viewing Area (W x H)	99.0 x 24.0	mm
Character Font (W x H)	5.0 x 7.0 with cursor	dots
Character Size (W x H)	4.84 x 9.66	mm
Character Pitch (W x H)	6.0 x 10.34	mm
Dot Size (W x H)	0.92 x 1.1	mm

ABSOLUTE MAXIMUM RATINGS

PARAMETER	SYMBOL	MIN.	MAX.	UNIT
Supply Voltage Logic	V_{DD} - V_{SS}	-0.3	7.0	V
Supply Voltage Drive	V_{DD} - V_{EE}	-0.3	13.5	V
Input Voltage	V_{IN}	-0.3	V_{DD} +0.3	V
Operating Temperature	See page 8			
Storage Temperature				

PIN CONFIGURATION

PIN	SYMBOL	SIGNAL DESCRIPTION
1	V_{SS}	GND (0 V)
2	V_{DD}	Power Supply (+5.0V)
3	V_{EE}	Supply Voltage LCD Driver
4	RS	Register Select – LOW = Instruction, HIGH=DATA
5	R/W	Read / Write LOW = MPU to LCM, HIGH = LCM to MPU
6	E	Enable R/W = LOW: Data are talking over at falling edge R/W = HIGH: Data can be read at E = 1
7 to 14	DB_0 to DB_7	Data Bus – Software selectable 4 or 8 bit Mode
15	A	Anode of LED Unit
16	K	Cathode of LED Unit

ELECTRICAL CHARACTERISTICS, Ta = 25°C

ITEM		SYMBOL	CONDITION	SPEC. VALUE			UNIT
				MIN.	TYP.	MAX.	
Supply Voltage (Logic)		V_{DD} - V_{SS}		4.5	5.0	5.5	V
Supply Current (Logic)		I_{DD}	V_{DD} =5V		0.8	2.0	mA
Input Voltage	HIGH	V_{IH}		2.2		V_{DD}	V
	LOW	V_{IL}		-0.3		0.6	V
Output Voltage	HIGH	V_{OH}	I_{OH}=0.2mA	2.4			V
	LOW	V_{OL}	I_{OL}=1.2mA			0.4	V
LCD Operating Voltage		V_{DD} - V_{EE}	V_{DD} =5V Ta=+25°C	4.5	4.7	5.0	V
Supply Current LCD Drive		I_{EE}			1.0	1.5	mA

Note (1): Value is high reliability type. Note (2): Electro-Optical Characteristics: See page 5.

BLOCK DIAGRAM

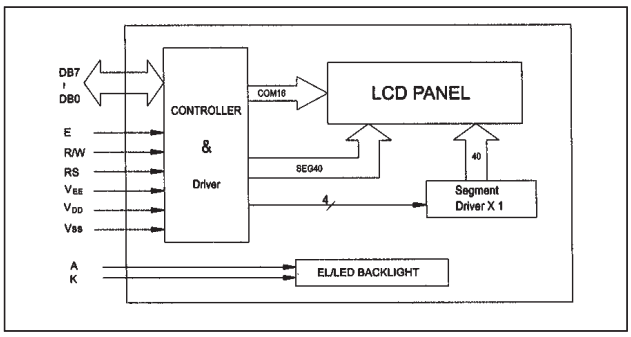

BACKLIGHTING CHARACTERISTICS, Ta = 25°C, LED

ITEM	SYMBOL	CONDITION	SPEC. VALUE			UNIT
			MIN.	TYP.	MAX.	
Supply Voltage	V_{LED}			4.2	4.6	V
Power Consumption	P_{LED}	I_F=270mA		1140		mW
Luminous	I_V	I_F=270mA		185		cd/m²

digital electronic gmbh • Tel. +49 (0) 8221/708-0 Fax. +49 (0) 8221/708-80

All specifications subject to change without notice.

STANDARD CHARACTER MODULES

YMS 162-03

16 CHAR x 2 LINE, 1/16 DUTY, 1/5 BIAS

EXTERNAL DIMENSION AND DISPLAY PATTERN

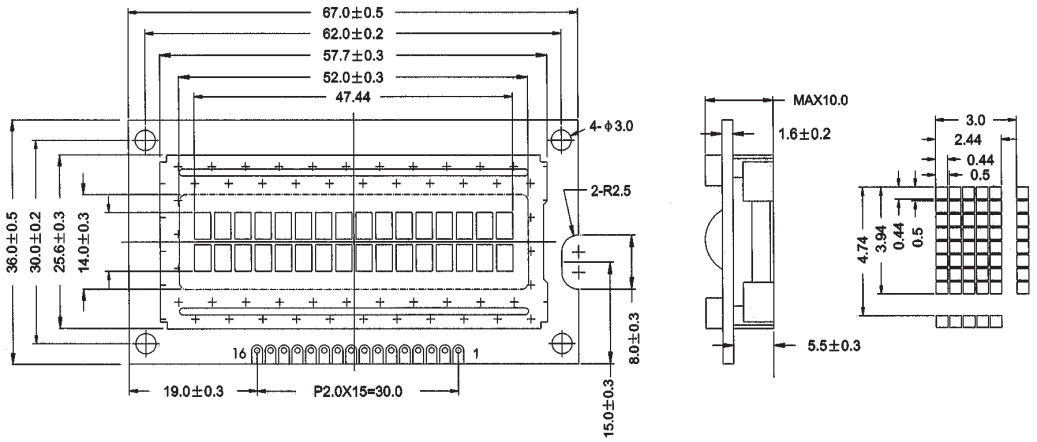

MECHANICAL DATA

ITEM	SPECIFICATION	UNIT
Module Size (W x H x T)	67.0 x 36.0 x 10.0	mm
Viewing Area (W x H)	52.0 x 14.0	mm
Character Font (W x H)	5.0 x 7.0 with cursor	dots
Character Size (W x H)	2.44 x 3.94	mm
Character Pitch (W x H)	3.0 x 4.74	mm
Dot Size (W x H)	0.44 x 0.44	mm

ABSOLUTE MAXIMUM RATINGS

PARAMETER	SYMBOL	MIN.	MAX.	UNIT
Supply Voltage Logic	V_{DD} - V_{SS}	-0.3	7.0	V
Supply Voltage Drive	V_{DD} - V_{EE}	-0.3	13.5	V
Input Voltage	V_{IN}	-0.3	V_{DD} +0.3	V
Operating Temperature	See page 8			
Storage Temperature				

PIN CONFIGURATION

PIN	SYMBOL	SIGNAL DESCRIPTION
1	V_{SS}	GND (0 V)
2	V_{DD}	Power Supply (+5.0V)
3	V_{EE}	Supply Voltage LCD Driver
4	RS	Register Select – LOW = Instruction, HIGH=DATA
5	R/W	Read / Write LOW = MPU to LCM, HIGH = LCM to MPU
6	E	Enable R/W = LOW: Data are talking over at falling edge R/W = HIGH: Data can be read at E = 1
7 to 14	DB_0 to DB_7	Data Bus – Software selectable 4 or 8 bit Mode
15	A	Anode of LED Unit
16	K	Cathode of LED Unit

ELECTRICAL CHARACTERISTICS, Ta = 25°C

ITEM		SYMBOL	CONDITION	SPEC. VALUE			UNIT
				MIN.	TYP.	MAX.	
Supply Voltage (Logic)		V_{DD} - V_{SS}		4.5	5.0	5.5	V
Supply Current (Logic)		I_{DD}	V_{DD} =5V		0.8	2.0	mA
Input Voltage	HIGH	V_{IH}		2.2		V_{DD}	V
	LOW	V_{IL}		-0.3		0.6	V
Output Voltage	HIGH	V_{OH}	I_{OH}=0.2mA	2.4			V
	LOW	V_{OL}	I_{OL}=1.2mA			0.4	V
LCD Operating Voltage		V_{DD} - V_{EE}	V_{DD} =5V Ta=+25°C	4.5	4.7	5.0	V
Supply Current LCD Drive		I_{EE}			1.0	1.5	mA

Note (1): Value is high reliability type. Note (2):Electro-Optical Characteristics: See page 5.

BLOCK DIAGRAM

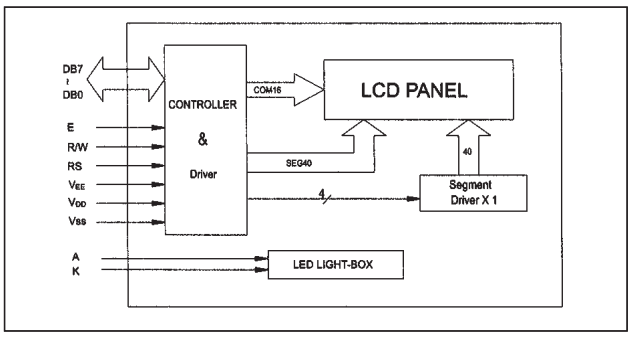

BACKLIGHTING CHARACTERISTICS, Ta = 25°C, LED

ITEM	SYMBOL	CONDITION	SPEC. VALUE			UNIT
			MIN.	TYP.	MAX.	
Supply Voltage	V_{LED}		4.05	4.25	4.45	V
Power Consumption	P_{LED}	I_F=2x20mA		2x130	600	mW
Luminous	I_V	I_F=2x20mA	45	564		cd/m²

STANDARD CHARACTER MODULES

YMS 162-04

16 CHAR x 2 LINE, 1/16 DUTY, 1/5 BIAS

EXTERNAL DIMENSION AND DISPLAY PATTERN

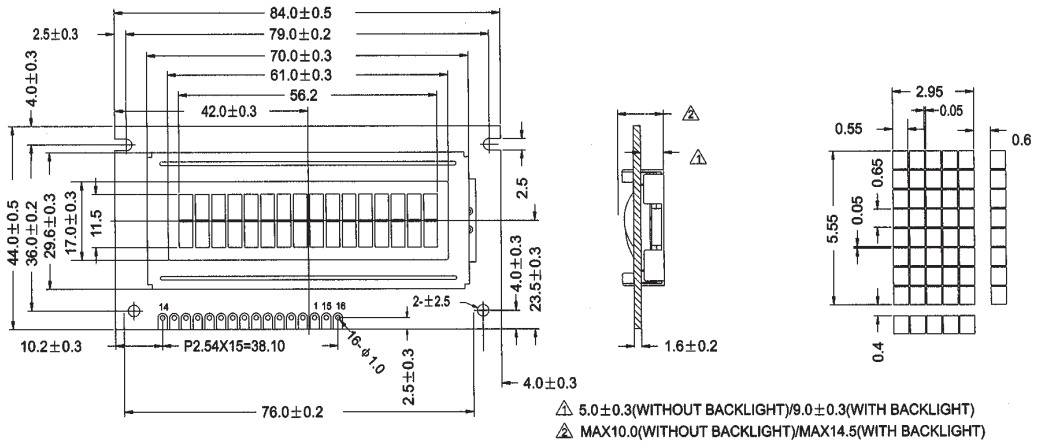

MECHANICAL DATA

ITEM	SPECIFICATION	UNIT
Module Size (W x H x T)	84.0 x 44.0 x 10.0/14.5	mm
Viewing Area (W x H)	61.0 x 17.0	mm
Character Font (W x H)	5.0 x 7.0 with cursor	dots
Character Size (W x H)	2.95 x 5.55	mm
Character Pitch (W x H)	3.55 x 5.95	mm
Dot Size (W x H)	0.55 x 0.65	mm

ABSOLUTE MAXIMUM RATINGS

PARAMETER	SYMBOL	MIN.	MAX.	UNIT
Supply Voltage Logic	V_{DD} - V_{SS}	-0.3	7.0	V
Supply Voltage Drive	V_{DD} - V_{EE}	-0.3	13.5	V
Input Voltage	V_{IN}	-0.3	V_{DD} +0.3	V
Operating Temperature	See page 8			
Storage Temperature				

PIN CONFIGURATION

PIN	SYMBOL	SIGNAL DESCRIPTION
1	V_{SS}	GND (0 V)
2	V_{DD}	Power Supply (+5.0V)
3	V_{EE}	Supply Voltage LCD Driver
4	RS	Register Select – LOW = Instruction, HIGH=DATA
5	R/W	Read / Write LOW = MPU to LCM, HIGH = LCM to MPU
6	E	Enable R/W = LOW: Data are talking over at falling edge R/W = HIGH: Data can be read at E = 1
7 to 14	DB_0 to DB_7	Data Bus – Software selectable 4 or 8 bit Mode
15	A	Anode of LED Unit
16	K	Cathode of LED Unit

ELECTRICAL CHARACTERISTICS, Ta = 25°C

ITEM		SYMBOL	CONDITION	SPEC. VALUE			UNIT
				MIN.	TYP.	MAX.	
Supply Voltage (Logic)		V_{DD} - V_{SS}		4.5	5.0	5.5	V
Supply Current (Logic)		I_{DD}	V_{DD} =5V		0.8	2.0	mA
Input Voltage	HIGH	V_{IH}		2.2		V_{DD}	V
	LOW	V_{IL}		-0.3		0.6	V
Output Voltage	HIGH	V_{OH}	I_{OH}=0.2mA	2.4			V
	LOW	V_{OL}	I_{OL}=1.2mA			0.4	V
LCD Operating Voltage		V_{DD} - V_{EE}	V_{DD} =5V Ta=+25°C	4.5	4.7	5.0	V
Supply Current LCD Drive		I_{EE}			1.0	1.5	mA

Note (1): Value is high reliability type. Note (2): Electro-Optical Characteristics: See page 5.

BLOCK DIAGRAM

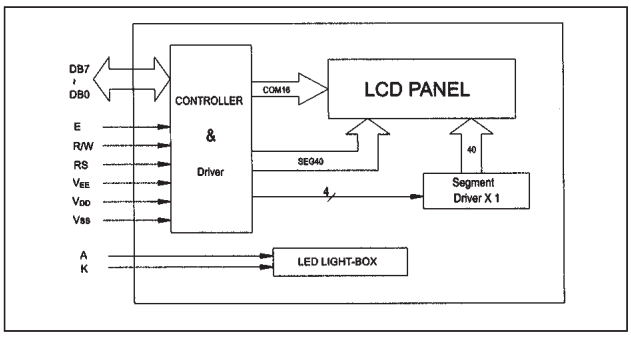

BACKLIGHTING CHARACTERISTICS, Ta = 25°C, LED

ITEM	SYMBOL	CONDITION	SPEC. VALUE			UNIT
			MIN.	TYP.	MAX.	
Supply Voltage	V_{LED}		3.8	4.0	4.2	V
Power Consumption	P_{LED}	I_F=90mA			900	mW
Luminous	I_V	I_F=90mA	92.5	116		cd/m²

digital electronic gmbh • Tel. +49 (0) 8221/708-0 Fax. +49 (0) 8221/708-80

All specifications subject to change without notice.

STANDARD CHARACTER MODULES

YMS 162-10

16 CHAR x 2 LINE, 1/16 DUTY, 1/5 BIAS

EXTERNAL DIMENSION AND DISPLAY PATTERN

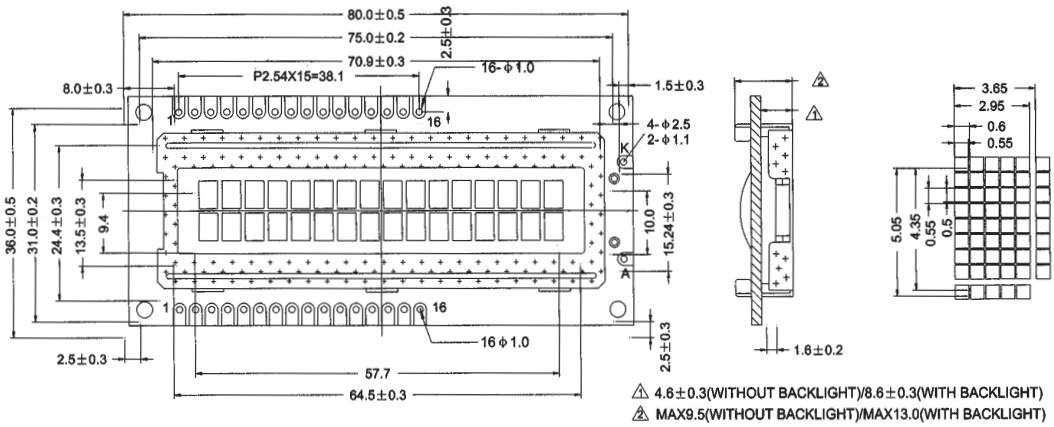

MECHANICAL DATA

ITEM	SPECIFICATION	UNIT
Module Size (W x H x T)	80.0 x 36.0 x 9.5/13.0	mm
Viewing Area (W x H)	64.5 x 13.5	mm
Character Font (W x H)	5.0 x 7.0 with cursor	dots
Character Size (W x H)	2.95 x 4.35	mm
Character Pitch (W x H)	3.65 x 5.05	mm
Dot Size (W x H)	0.55 x 0.5	mm

ABSOLUTE MAXIMUM RATINGS

PARAMETER	SYMBOL	MIN.	MAX.	UNIT
Supply Voltage Logic	V_{DD} - V_{SS}	-0.3	7.0	V
Supply Voltage Drive	V_{DD} - V_{EE}	-0.3	13.5	V
Input Voltage	V_{IN}	-0.3	V_{DD} +0.3	V
Operating Temperature	See page 8			
Storage Temperature				

PIN CONFIGURATION

PIN	SYMBOL	SIGNAL DESCRIPTION
1	V_{SS}	GND (0 V)
2	V_{DD}	Power Supply (+5.0V)
3	V_{EE}	Supply Voltage LCD Driver
4	RS	Register Select – LOW = Instruction, HIGH=DATA
5	R/W	Read / Write LOW = MPU to LCM, HIGH = LCM to MPU
6	E	Enable R/W = LOW: Data are talking over at falling edge R/W = HIGH: Data can be read at E = 1
7 to 14	DB_0 to DB_7	Data Bus – Software selectable 4 or 8 bit Mode
15	A	Anode of LED Unit
16	K	Cathode of LED Unit

ELECTRICAL CHARACTERISTICS, Ta = 25°C

ITEM		SYMBOL	CONDITION	SPEC. VALUE			UNIT
				MIN.	TYP.	MAX.	
Supply Voltage (Logic)		V_{DD} - V_{SS}		4.5	5.0	5.5	V
Supply Current (Logic)		I_{DD}	V_{DD} =5V		0.8	2.0	mA
Input Voltage	HIGH	V_{IH}		2.2		V_{DD}	V
	LOW	V_{IL}		-0.3		0.6	V
Output Voltage	HIGH	V_{OH}	I_{OH}=0.2mA	2.4			V
	LOW	V_{OL}	I_{OL}=1.2mA			0.4	V
LCD Operating Voltage		V_{DD} - V_{EE}	V_{DD} =5V Ta=+25°C	4.5	4.7	5.0	V
Supply Current LCD Drive		I_{EE}			1.0	1.5	mA

Note (1): Value is high reliability type. Note (2):Electro-Optical Characteristics: See page 5.

BLOCK DIAGRAM

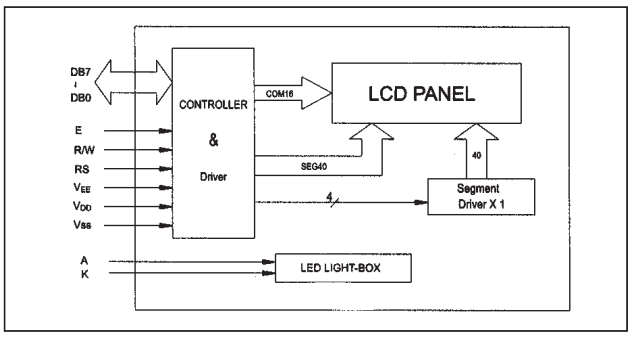

BACKLIGHTING CHARACTERISTICS, Ta = 25°C, LED

ITEM	SYMBOL	CONDITION	SPEC. VALUE			UNIT
			MIN.	TYP.	MAX.	
Supply Voltage	V_{LED}			4.2	4.6	V
Power Consumption	P_{LED}	I_F=90mA		380		mW
Luminous	I_V	I_F=90mA		200		cd/m^2

STANDARD CHARACTER MODULES

YMS 162-21

16 CHAR x 2 LINE, 1/16 DUTY, 1/4 BIAS

EXTERNAL DIMENSION AND DISPLAY PATTERN

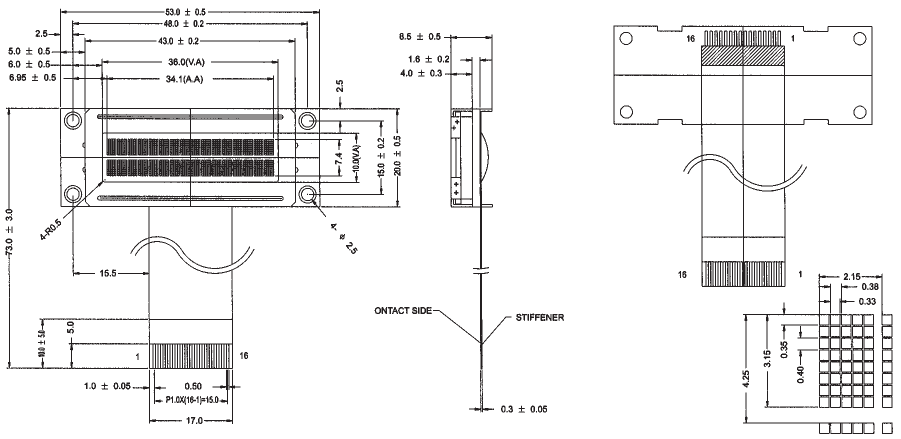

MECHANICAL DATA

ITEM	SPECIFICATION	UNIT
Module Size (W x H x T)	53.0 x 20.0 x 8.5	mm
Viewing Area (W x H)	36.0 x 10.0	mm
Character Font (W x H)	5.0 x 7.0 with cursor	dots
Character Size (W x H)	1.85 x 3.15	mm
Character Pitch (W x H)	2.15 x 4.25	mm
Dot Size (W x H)	0.33 x 0.35	mm

ABSOLUTE MAXIMUM RATINGS

PARAMETER	SYMBOL	MIN.	MAX.	UNIT
Supply Voltage Logic	V_{DD} - V_{SS}	-0.3	7.0	V
Supply Voltage Drive	V_{DD} - V_{EE}	-0.3	13.5	V
Input Voltage	V_{IN}	-0.3	V_{DD} +0.3	V
Operating Temperature	See page 8			
Storage Temperature				

PIN CONFIGURATION

PIN	SYMBOL	SIGNAL DESCRIPTION
1	V_{SS}	GND (0 V)
2	V_{DD}	Power Supply (+5.0V)
3	V_{EE}	Supply Voltage LCD Driver
4	RS	Register Select – LOW = Instruction, HIGH=DATA
5	R/W	Read / Write LOW = MPU to LCM, HIGH = LCM to MPU
6	E	Enable R/W = LOW: Data are talking over at falling edge R/W = HIGH: Data can be read at E = 1
7 to 14	DB_0 to DB_7	Data Bus – Software selectable 4 or 8 bit Mode
15	A	Anode of LED Unit
16	K	Cathode of LED Unit

ELECTRICAL CHARACTERISTICS, Ta = 25°C

ITEM		SYMBOL	CONDITION	SPEC. VALUE			UNIT
				MIN.	TYP.	MAX.	
Supply Voltage (Logic)		V_{DD} - V_{SS}		4.5	5.0	5.5	V
Supply Current (Logic)		I_{DD}	V_{DD} =5V		0.8	2.0	mA
Input Voltage	HIGH	V_{IH}		2.2		V_{DD}	V
	LOW	V_{IL}		-0.3		0.6	V
Output Voltage	HIGH	V_{OH}	I_{OH} =1.2mA	2.4			V
	LOW	V_{OL}	I_{OL} =1.2mA			0.4	V
LCD Operating Voltage		V_{DD} - V_{EE}	V_{DD} =5V Ta=+25°C		4.4		V
Supply Current LCD Drive		I_{EE}			1.0		mA

Note (1): Value is high reliability type. Note (2): Electro-Optical Characteristics: See page 5.

BLOCK DIAGRAM

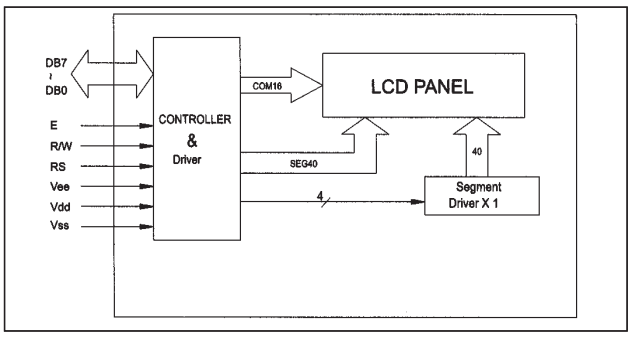

BACKLIGHTING CHARACTERISTICS, Ta = 25°C, LED

ITEM	SYMBOL	CONDITION	SPEC. VALUE			UNIT
			MIN.	TYP.	MAX.	
Supply Voltage	V_{LED}		3.9	4.2	4.5	V
Luminous	I_V		80			cd/m²

digital electronic gmbh • Tel. +49 (0) 8221/708-0 Fax. +49 (0) 8221/708-80

All specifications subject to change without notice.

STANDARD CHARACTER MODULES

YMS 162-22

16 CHAR x 2 LINE, 1/16 DUTY, 1/5 BIAS

EXTERNAL DIMENSION AND DISPLAY PATTERN

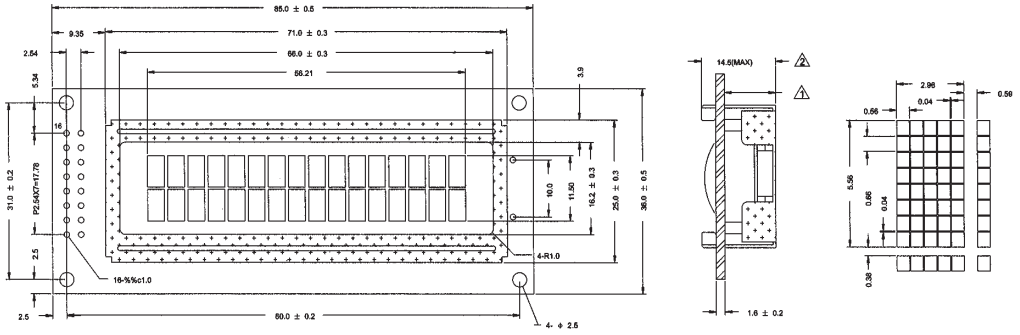

MECHANICAL DATA

ITEM	SPECIFICATION	UNIT
Module Size (W x H x T)	85.0 x 36.0 x 14.5/9.5	mm
Viewing Area (W x H)	66.0 x 16.2	mm
Character Font (W x H)	5.0 x 7.0 with cursor	dots
Character Size (W x H)	85.0 x 36.0	mm
Character Pitch (W x H)	2.96 x 5.56	mm
Dot Size (W x H)	0.56 x 0.66	mm

ABSOLUTE MAXIMUM RATINGS

PARAMETER	SYMBOL	MIN.	MAX.	UNIT
Supply Voltage Logic	V_{DD} - V_{SS}	-0.3	7.0	V
Supply Voltage Drive	V_{DD} - V_{EE}	-0.3	13.5	V
Input Voltage	V_{IN}	-0.3	V_{DD} +0.3	V
Operating Temperature	See page 8			
Storage Temperature				

PIN CONFIGURATION

PIN	SYMBOL	SIGNAL DESCRIPTION
1	V_{SS}	GND (0 V)
2	V_{DD}	Power Supply (+5.0V)
3	V_{EE}	Supply Voltage LCD Driver
4	RS	Register Select – LOW = Instruction, HIGH=DATA
5	R/W	Read / Write LOW = MPU to LCM, HIGH = LCM to MPU
6	E	Enable R/W = LOW: Data are talking over at falling edge R/W = HIGH: Data can be read at E = 1
7 to 14	DB_0 to DB_7	Data Bus – Software selectable 4 or 8 bit Mode
15	A	Anode of LED Unit
16	K	Cathode of LED Unit

ELECTRICAL CHARACTERISTICS, Ta = 25°C

ITEM		SYMBOL	CONDITION	SPEC. VALUE			UNIT
				MIN.	TYP.	MAX.	
Supply Voltage (Logic)		V_{DD} - V_{SS}		4.5	5.0	5.5	V
Supply Current (Logic)		I_{DD}	V_{DD} =5V		0.8	2.0	mA
Input Voltage	HIGH	V_{IH}		2.2		V_{DD}	V
	LOW	V_{IL}		-0.3		0.6	V
Output Voltage	HIGH	V_{OH}	I_{OH}=0.2mA	2.4			V
	LOW	V_{OL}	I_{OL}=0.2mA			0.4	V
LCD Operating Voltage		V_{DD} - V_{EE}	V_{DD} =5V Ta=+25°C		7.8/4.7		V
Supply Current LCD Drive		I_{EE}			1.3		mA

Note (1): Value is high reliability type. Note (2):Electro-Optical Characteristics: See page 5.

BLOCK DIAGRAM

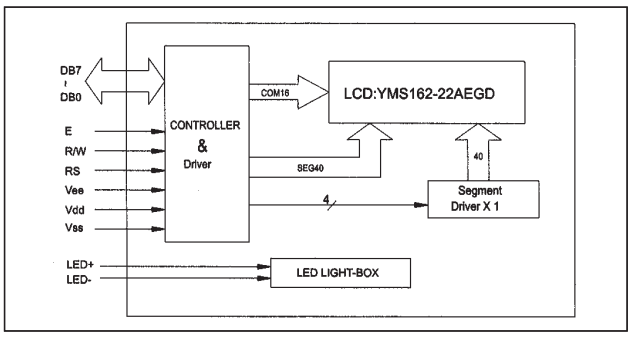

BACKLIGHTING CHARACTERISTICS, Ta = 25°C, LED

ITEM	SYMBOL	CONDITION	SPEC. VALUE			UNIT
			MIN.	TYP.	MAX.	
Supply Voltage	V_{LED}			4.2	4.6	V
Power Consumption	P_{LED}			0.38		mW
Luminous	I_V			40	200	cd/m^2

STANDARD CHARACTER MODULES

YMS 164-01

16 CHAR x 4 LINE, 1/16 DUTY, 1/5 BIAS

EXTERNAL DIMENSION AND DISPLAY PATTERN

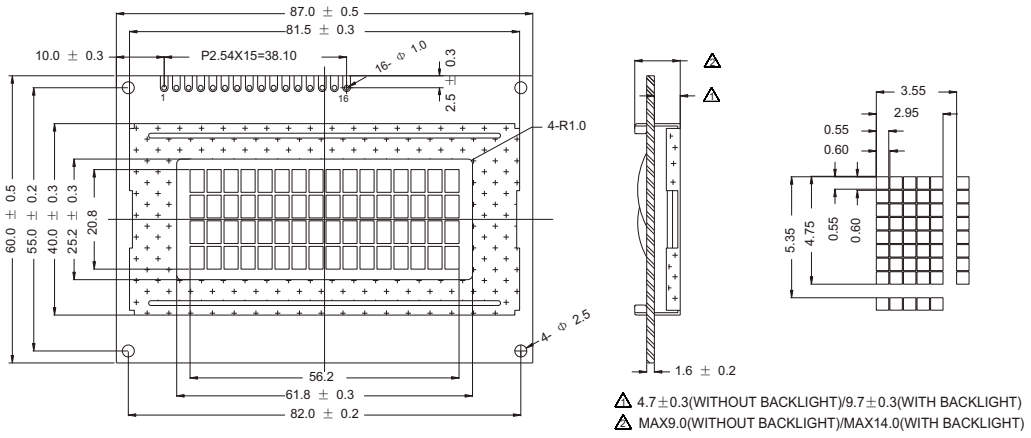

MECHANICAL DATA

ITEM	SPECIFICATION	UNIT
Module Size (W x H x T)	87.0 x 60.0 x 9./14.0	mm
Viewing Area (W x H)	61.8 x 25.2	mm
Character Font (W x H)	5.0 x 7.0 with cursor	dots
Character Size (W x H)	2.95 x 4.75	mm
Character Pitch (W x H)	3.55 x 5.35	mm
Dot Size (W x H)	0.55 x 0.55	mm

ABSOLUTE MAXIMUM RATINGS

PARAMETER	SYMBOL	MIN.	MAX.	UNIT
Supply Voltage Logic	V_{DD} - V_{SS}	-0.3	7.0	V
Supply Voltage Drive	V_{DD} - V_{EE}	-0.3	13.5	V
Input Voltage	V_{IN}	-0.3	V_{DD} +0.3	V
Operating Temperature	See page 8			
Storage Temperature				

PIN CONFIGURATION

PIN	SYMBOL	SIGNAL DESCRIPTION
1	V_{SS}	GND (0 V)
2	V_{DD}	Power Supply (+5.0V)
3	V_{EE}	Supply Voltage LCD Driver
4	RS	Register Select – LOW = Instruction, HIGH=DATA
5	R/W	Read / Write LOW = MPU to LCM, HIGH = LCM to MPU
6	E	Enable R/W = LOW: Data are talking over at falling edge R/W = HIGH: Data can be read at E = 1
7 to 14	DB_0 to DB_7	Data Bus – Software selectable 4 or 8 bit Mode
15	A	Anode of LED Unit
16	K	Cathode of LED Unit

ELECTRICAL CHARACTERISTICS, Ta = 25°C

ITEM		SYMBOL	CONDITION	SPEC. VALUE			UNIT
				MIN.	TYP.	MAX.	
Supply Voltage (Logic)		V_{DD} - V_{SS}		4.5	5.0	5.5	V
Supply Current (Logic)		I_{DD}	V_{DD} =5V		0.8	2.0	mA
Input Voltage	HIGH	V_{IH}		2.2		V_{DD}	V
	LOW	V_{IL}		-0.3		0.6	V
Output Voltage	HIGH	V_{OH}	I_{OH}=0.2mA	2.4			V
	LOW	V_{OL}	I_{OL}=1.2mA			0.4	V
LCD Operating Voltage		V_{DD} - V_{EE}	V_{DD} =5V Ta=+25°C	4.5	4.7	5.0	V
Supply Current LCD Drive		I_{EE}			1.0	1.5	mA

Note (1): Value is high reliability type. Note (2): Electro-Optical Characteristics: See page 5.

BLOCK DIAGRAM

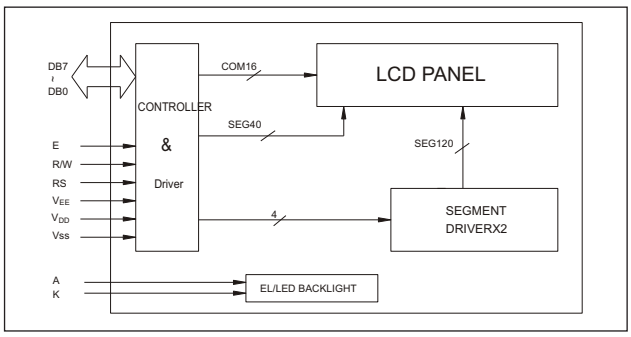

BACKLIGHTING CHARACTERISTICS, Ta = 25°C, LED

ITEM	SYMBOL	CONDITION	SPEC. VALUE			UNIT
			MIN.	TYP.	MAX.	
Supply Voltage	V_{LED}			4.2	4.6	V
Power Consumption	P_{LED}	I_F=200mA		840		mW
Luminous	I_V	I_F=200mA		80		cd/m^2

digital electronic gmbh • Tel. +49 (0) 8221/708-0 Fax. +49 (0) 8221/708-80

All specifications subject to change without notice.

STANDARD CHARACTER MODULES

YMS 202-01

20 CHAR x 2 LINE, 1/16 DUTY, 1/5 BIAS

EXTERNAL DIMENSION AND DISPLAY PATTERN

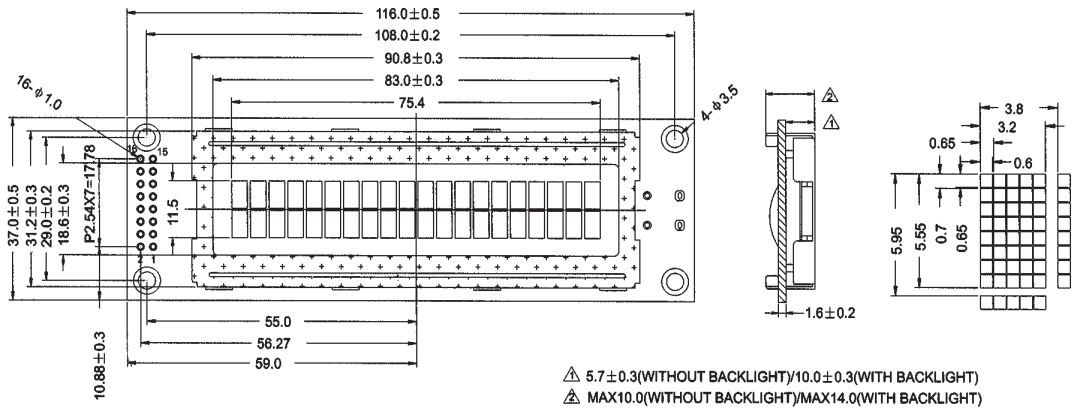

MECHANICAL DATA

ITEM	SPECIFICATION	UNIT
Module Size (W x H x T)	116.0 x 37.0 x 10.0/14.0	mm
Viewing Area (W x H)	83.0 x 18.6	mm
Character Font (W x H)	5.0 x 7.0 with cursor	dots
Character Size (W x H)	3.2 x 5.55	mm
Character Pitch (W x H)	3.8 x 5.95	mm
Dot Size (W x H)	0.6 x 0.65	mm

ABSOLUTE MAXIMUM RATINGS

PARAMETER	SYMBOL	MIN.	MAX.	UNIT
Supply Voltage Logic	V_{DD} - V_{SS}	-0.3	7.0	V
Supply Voltage Drive	V_{DD} - V_{EE}	3.0	11.0	V
Input Voltage	V_{IN}	-0.3	V_{DD} +0.3	V
Operating Temperature	See page 8			
Storage Temperature				

PIN CONFIGURATION

PIN	SYMBOL	SIGNAL DESCRIPTION
1	V_{SS}	GND (0 V)
2	V_{DD}	Power Supply (+5.0V)
3	V_{EE}	Supply Voltage LCD Driver
4	RS	Register Select – LOW = Instruction, HIGH=DATA
5	R/W	Read / Write LOW = MPU to LCM, HIGH = LCM to MPU
6	E	Enable R/W = LOW: Data are talking over at falling edge R/W = HIGH: Data can be read at E = 1
7 to 14	DB_0 to DB_7	Data Bus – Software selectable 4 or 8 bit Mode
15	A/NC	Anode of LED Unit / No Connection
16	K/NC	Cathode of LED Unit / No Connection

ELECTRICAL CHARACTERISTICS, Ta = 25°C

ITEM		SYMBOL	CONDITION	SPEC. VALUE			UNIT
				MIN.	TYP.	MAX.	
Supply Voltage (Logic)		V_{DD} - V_{SS}		4.5	5.0	5.5	V
Supply Current (Logic)		I_{DD}	V_{DD} =5V		0.8	2.0	mA
Input Voltage	HIGH	V_{IH}		2.2		V_{DD}	V
	LOW	V_{IL}		-0.3		0.6	V
Output Voltage	HIGH	V_{OH}	I_{OH}=0.2mA	2.4			V
	LOW	V_{OL}	I_{OL}=1.2mA			0.4	V
LCD Operating Voltage		V_{DD} - V_{EE}	V_{DD} =5V Ta=+25°C	4.5	4.7	5.0	V
Supply Current LCD Drive		I_{EE}			1.0	1.5	mA

Note (1): Value is high reliability type. Note (2):Electro-Optical Characteristics: See page 5.

BLOCK DIAGRAM

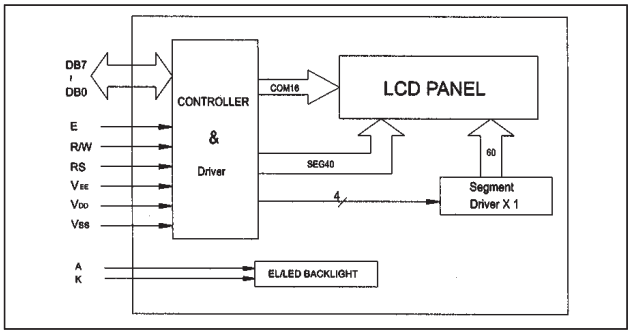

BACKLIGHTING CHARACTERISTICS, Ta = 25°C, LED

ITEM	SYMBOL	CONDITION	SPEC. VALUE			UNIT
			MIN.	TYP.	MAX.	
Supply Voltage	V_{LED}			4.2	4.6	V
Power Consumption	P_{LED}	I_F=140mA		590		mW
Luminous	I_V	I_F=140mA		200		cd/m^2

STANDARD CHARACTER MODULES

YMC 202-16

20 CHAR x 2 LINE, 1/16 DUTY, 1/5 BIAS

EXTERNAL DIMENSION AND DISPLAY PATTERN

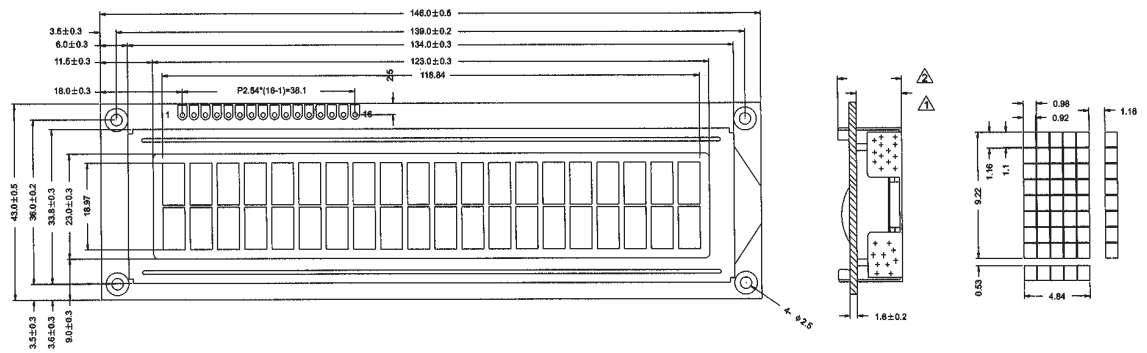

⚠1 5.0±0.3(WITHOUT BACKLIGHT)/9.4±0.3(WITH BACKLIGHT)
⚠2 MAX10.0(WITHOUT BACKLIGHT)/MAX14.0(WITH BACKLIGHT)

MECHANICAL DATA

ITEM	SPECIFICATION	UNIT
Module Size (W x H x T)	146.0 x 43.0 x 14.0/10.0	mm
Viewing Area (W x H)	123.0 x 23.0	mm
Character Font (W x H)	5.0 x 7.0 with cursor	dots
Character Size (W x H)	4.84 x 9.22	mm
Dot Size (W x H)	0.92 x 1.1	mm

ABSOLUTE MAXIMUM RATINGS

PARAMETER	SYMBOL	MIN.	MAX.	UNIT
Supply Voltage Logic	V_{DD} - V_{SS}	-0.3	7.0	V
Supply Voltage Drive	V_{DD} - V_{EE}	V_{DD}+0.3	V_{DD} -13.5	V
Input Voltage	V_{IN}	-0.3	V_{DD} +0.3	V
Operating Temperature	See page 8			
Storage Temperature				

PIN CONFIGURATION

PIN	SYMBOL	SIGNAL DESCRIPTION
1	V_{SS}	GND (0 V)
2	V_{DD}	Power Supply (+5.0V)
3	V_{EE}	Supply Voltage LCD Driver
4	RS	Register Select – LOW = Instruction, HIGH=DATA
5	R/W	Read / Write LOW = MPU to LCM, HIGH = LCM to MPU
6	E	Enable R/W = LOW: Data are talking over at falling edge R/W = HIGH: Data can be read at E = 1
7 to 14	DB_0 to DB_7	Data Bus – Software selectable 4 or 8 bit Mode
15	A	Anode of LED Unit
16	K	Cathode of LED Unit

ELECTRICAL CHARACTERISTICS, Ta = 25°C

ITEM		SYMBOL	CONDITION	SPEC. VALUE			UNIT
				MIN.	TYP.	MAX.	
Supply Voltage (Logic)		V_{DD} - V_{SS}		4.5	5.0		V
Supply Current (Logic)		I_{DD}	V_{DD} =5V		0.8	4.5	mA
Input Voltage	HIGH	V_{IH}		2.2		0.3	V
	LOW	V_{IL}		-0.3		0.3 V_{DD}	V
Output Voltage	HIGH	V_{OH}	I_{OH}=1.2mA	2.4			V
	LOW	V_{OL}	I_{OL}=1.2mA			0.4	V
LCD Operating Voltage		V_{DD} - V_{EE}	V_{DD} =5V Ta=+25°C		4.2	4.7	V
Supply Current LCD Drive		I_{EE}			1.0	1.5	mA

Note (1): Value is high reliability type. Note (2): Electro-Optical Characteristics: See page 5.

BLOCK DIAGRAM

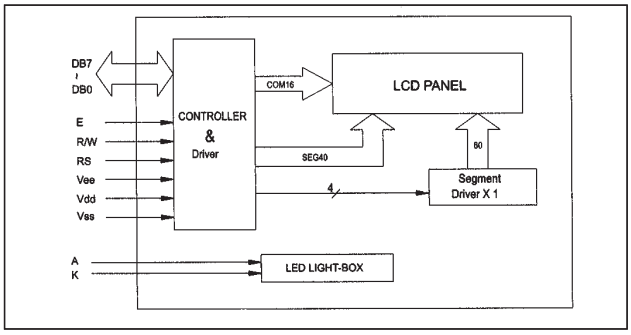

BACKLIGHTING CHARACTERISTICS, Ta = 25°C, LED

ITEM	SYMBOL	CONDITION	SPEC. VALUE			UNIT
			MIN.	TYP.	MAX.	
Supply Voltage	V_{LED}		3.0	3.2	3.5	V
Power Consumption	P_{LED}				140	mW

digital electronic gmbh • Tel. +49 (0) 8221/708-0 Fax. +49 (0) 8221/708-80

All specifications subject to change without notice.

STANDARD CHARACTER MODULES

YMS 204-01

20 CHAR x 4 LINE, 1/16 DUTY, 1/5 BIAS

EXTERNAL DIMENSION AND DISPLAY PATTERN

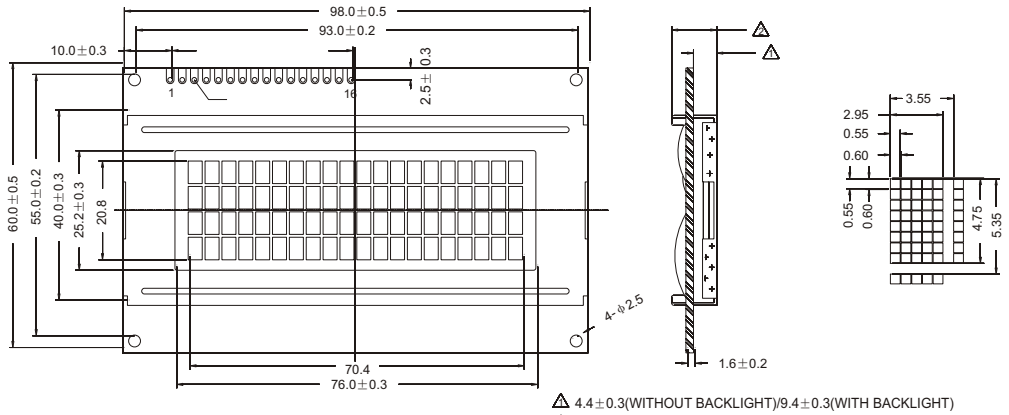

⚠ 4.4±0.3(WITHOUT BACKLIGHT)/9.4±0.3(WITH BACKLIGHT)
⚠ MAX9.2(WITHOUT BACKLIGHT)/MAX14.2(WITH BACKLIGHT)

MECHANICAL DATA

ITEM	SPECIFICATION	UNIT
Module Size (W x H x T)	98.0 x 60.0 x 9.2/14.2	mm
Viewing Area (W x H)	76.0 x 25.2	mm
Character Font (W x H)	5.0 x 7.0 with cursor	dots
Character Size (W x H)	2.95 x 4.75	mm
Character Pitch (W x H)	3.55 x 5.35	mm
Dot Size (W x H)	0.55 x 0.55	mm

ABSOLUTE MAXIMUM RATINGS

PARAMETER	SYMBOL	MIN.	MAX.	UNIT
Supply Voltage Logic	V_{DD} - V_{SS}	-0.3	7.0	V
Supply Voltage Drive	V_{DD} - V_{EE}	V_{DD}+0.3	V_{DD}-13.5	V
Input Voltage	V_{IN}	-0.3	V_{DD} +0.3	V
Operating Temperature	See page 8			
Storage Temperature				

PIN CONFIGURATION

PIN	SYMBOL	SIGNAL DESCRIPTION
1	V_{SS}	GND (0 V)
2	V_{DD}	Power Supply (+5.0V)
3	V_{EE}	Supply Voltage LCD Driver
4	RS	Register Select – LOW = Instruction, HIGH=DATA
5	R/W	Read / Write LOW = MPU to LCM, HIGH = LCM to MPU
6	E	Enable R/W = LOW: Data are talking over at falling edge R/W = HIGH: Data can be read at E = 1
7 to 14	DB_0 to DB_7	Data Bus – Software selectable 4 or 8 bit Mode
15	A	Anode of LED Unit
16	K	Cathode of LED Unit

ELECTRICAL CHARACTERISTICS, Ta = 25°C

ITEM		SYMBOL	CONDITION	SPEC. VALUE			UNIT
				MIN.	TYP.	MAX.	
Supply Voltage (Logic)		V_{DD} - V_{SS}		4.5	5.0	5.5	V
Supply Current (Logic)		I_{DD}	V_{DD} =5V		2.2	3.0	mA
Input Voltage	HIGH	V_{IH}		2.2		V_{DD}	V
	LOW	V_{IL}		-0.3		0.6	V
Output Voltage	HIGH	V_{OH}	I_{OH}=0.2mA	2.4			V
	LOW	V_{OL}	I_{OL}=1.2mA			0.4	V
LCD Operating Voltage		V_{DD} - V_{EE}	V_{DD} =5V Ta=+25°C	4.5	4.7	5.0	V
Supply Current LCD Drive		I_{EE}			1.0	2.2	mA

Note (1): Value is high reliability type. Note (2):Electro-Optical Characteristics: See page 5.

BLOCK DIAGRAM

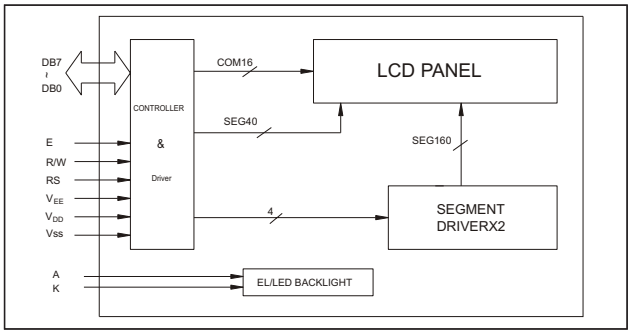

BACKLIGHTING CHARACTERISTICS, Ta = 25°C, LED

ITEM	SYMBOL	CONDITION	SPEC. VALUE			UNIT
			MIN.	TYP.	MAX.	
Supply Voltage	V_{LED}		3.8	4.0	4.2	V
Power Consumption	P_{LED}	I_F=180mA		720		mW
Luminous	I_V	I_F=180mA				cd/m^2

STANDARD CHARACTER MODULES

YMS 204-02

20 CHAR x 4 LINE, 1/16 DUTY, 1/5 BIAS

EXTERNAL DIMENSION AND DISPLAY PATTERN

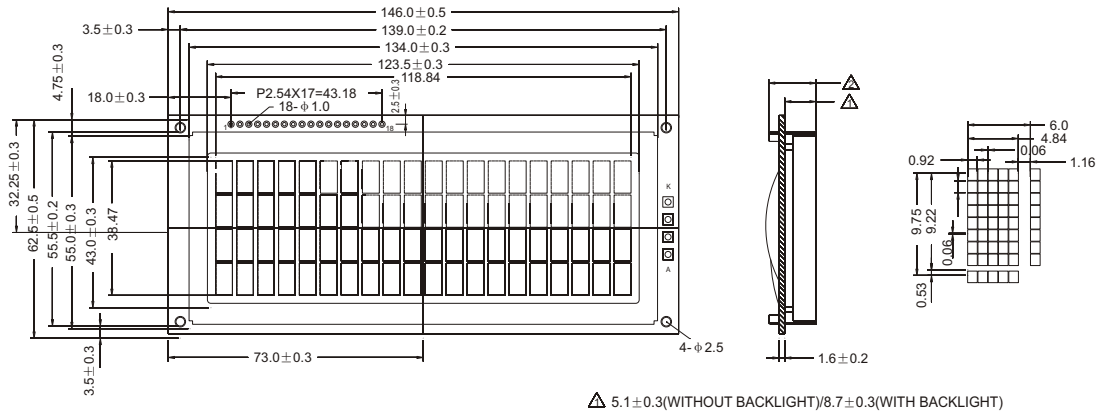

MECHANICAL DATA

ITEM	SPECIFICATION	UNIT
Module Size (W x H x T)	146.0 x 62.5 x 13.6/10.0	mm
Viewing Area (W x H)	123.5 x 43.0	mm
Character Font (W x H)	5.0 x 7.0 with cursor	dots
Character Size (W x H)	4.84 x 9.22	mm
Character Pitch (W x H)	6.0 x 9.75	mm
Dot Size (W x H)	0.92 x 1.1	mm

ABSOLUTE MAXIMUM RATINGS

PARAMETER	SYMBOL	MIN.	MAX.	UNIT
Supply Voltage Logic	V_{DD} - V_{SS}	-0.3	7.0	V
Supply Voltage Drive	V_{DD} - V_{EE}	V_{DD} +0.3	V_{DD} -13.5	V
Input Voltage	V_{IN}	-0.3	V_{DD} +0.3	V
Operating Temperature	See page 8			
Storage Temperature				

PIN CONFIGURATION

PIN	SYMBOL	SIGNAL DESCRIPTION
1	V_{SS}	GND (0 V)
2	V_{DD}	Power Supply (+5.0V)
3	V_{EE}	Supply Voltage LCD Driver
4	RS	Register Select – LOW = Instruction, HIGH=DATA
5	R/W	Read / Write LOW = MPU to LCM, HIGH = LCM to MPU
6	E	Enable R/W = LOW: Data are talking over at falling edge R/W = High: Data can be read at E = 1
7 to 14	DB_0 to DB_7	Data Bus – Software selectable 4 or 8 bit Mode
15	A	Anode of LED Unit
16	K	Cathode of LED Unit
17	V_{OUT}	Power Supply Voltage LCD Driver
18	NC	No Connection

ELECTRICAL CHARACTERISTICS, Ta = 25°C

ITEM		SYMBOL	CONDITION	SPEC. VALUE MIN.	TYP.	MAX.	UNIT
Supply Voltage (Logic)		V_{DD} - V_{SS}		4.5	5.0	5.5	V
Supply Current (Logic)		I_{DD}	V_{DD} =5V		2.0	3.0	mA
Input Voltage	HIGH	V_{IH}		2.2		V_{DD}	V
	LOW	V_{IL}		-0.3		0.6	V
Output Voltage	HIGH	V_{OH}	I_{OH}=0.2mA	2.4			V
	LOW	V_{OL}	I_{OL}=1.2mA			0.4	V
LCD Operating Voltage		V_{DD} - V_{EE}	V_{DD} =5V Ta=+25°C	4.5	4.7	5.0	V
Supply Current LCD Drive		I_{EE}			2.99		mA

Note (1): Value is high reliability type. Note (2): Electro-Optical Characteristics: See page 5.

BLOCK DIAGRAM

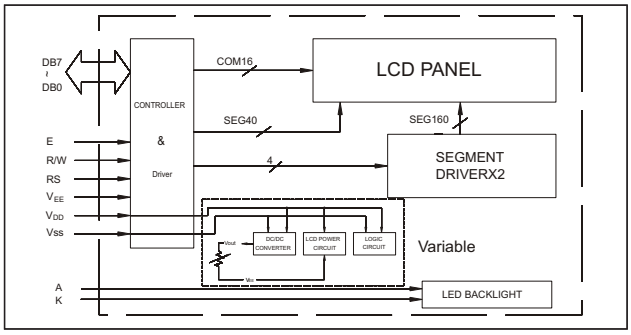

BACKLIGHTING CHARACTERISTICS, Ta = 25°C, LED

ITEM	SYMBOL	CONDITION	SPEC. VALUE MIN.	TYP.	MAX.	UNIT
Supply Voltage	V_{LED}			4.1	4.5	V
Power Consumption	P_{LED}	I_F=770mA		3157		mW
Luminous	I_V	I_F=770mA		150		cd/m²

digital electronic gmbh • Tel. +49 (0) 8221/708-0 Fax. +49 (0) 8221/708-80

All specifications subject to change without notice.

STANDARD CHARACTER MODULES

YMS 242-01

24 CHAR x 2 LINE, 1/16 DUTY, 1/5 BIAS

EXTERNAL DIMENSION AND DISPLAY PATTERN

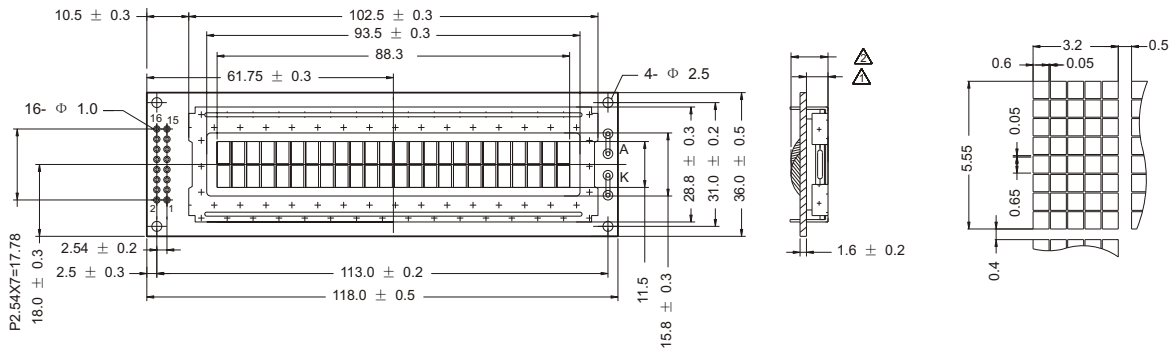

1 5.4±0.3(WITHOUT BACKLIGHT)/9.6±0.3(WITH BACKLIGHT)
2 MAX9.5(WITHOUT BACKLIGHT)/MAX14.0(WITH BACKLIGHT)

MECHANICAL DATA

ITEM	SPECIFICATION	UNIT
Module Size (W x H x T)	118.0 x 36.0 x 9.5/14.0	mm
Viewing Area (W x H)	93.5 x 15.8	mm
Character Font (W x H)	5.0 x 7.0 with cursor	dots
Character Size (W x H)	3.2 x 5.55	mm
Character Pitch (W x H)	3.7 x 5.95	mm
Dot Size (W x H)	0.6 x 0.65	mm

ABSOLUTE MAXIMUM RATINGS

PARAMETER	SYMBOL	MIN.	MAX.	UNIT
Supply Voltage Logic	V_{DD} - V_{SS}	-0.3	7.0	V
Supply Voltage Drive	V_{DD} - V_{EE}	3.0	11.0	V
Input Voltage	V_{IN}	-0.3	V_{DD} +0.3	V
Operating Temperature	See page 8			
Storage Temperature				

PIN CONFIGURATION

PIN	SYMBOL	SIGNAL DESCRIPTION
1	V_{SS}	GND (0 V)
2	V_{DD}	Power Supply (+5.0V)
3	V_{EE}	Supply Voltage LCD Driver
4	RS	Register Select – LOW = Instruction, HIGH=DATA
5	R/W	Read / Write LOW = MPU to LCM, HIGH = LCM to MPU
6	E	Enable R/W = LOW: Data are talking over at falling edge R/W = HIGH: Data can be read at E = 1
7 to 14	DB_0 to DB_7	Data Bus – Software selectable 4 or 8 bit Mode
15	A	Anode of LED Unit
16	K	Cathode of LED Unit

ELECTRICAL CHARACTERISTICS, Ta = 25°C

ITEM		SYMBOL	CONDITION	SPEC. VALUE			UNIT
				MIN.	TYP.	MAX.	
Supply Voltage (Logic)		V_{DD} - V_{SS}		4.5	5.0	5.5	V
Supply Current (Logic)		I_{DD}	V_{DD} =5V		0.8	2.0	mA
Input Voltage	HIGH	V_{IH}		2.2		V_{DD}	V
	LOW	V_{IL}		-0.3		0.6	V
Output Voltage	HIGH	V_{OH}	I_{OH}=0.2mA	2.4			V
	LOW	V_{OL}	I_{OL}=1.2mA			0.4	V
LCD Operating Voltage		V_{DD} - V_{EE}	V_{DD} =5V Ta=+25°C	4.5	4.7	5.0	V
Supply Current LCD Drive		I_{EE}			1.38		mA

Note (1): Value is high reliability type. Note (2):Electro-Optical Characteristics: See page 5.

BLOCK DIAGRAM

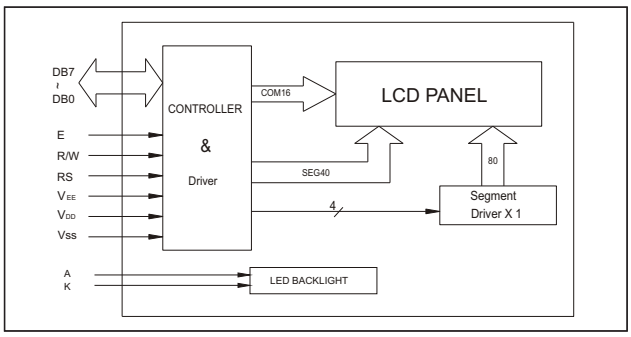

BACKLIGHTING CHARACTERISTICS, Ta = 25°C, LED

ITEM	SYMBOL	CONDITION	SPEC. VALUE			UNIT
			MIN.	TYP.	MAX.	
Supply Voltage	V_{LED}			4.2	4.6	V
Power Consumption	P_{LED}	I_F=150mA		630		mW
Luminous	I_V	I_F=150mA		185		cd/m²

STANDARD CHARACTER MODULES

YMS 402-01

40 CHAR x 2 LINE, 1/16 DUTY, 1/5 BIAS

EXTERNAL DIMENSION AND DISPLAY PATTERN

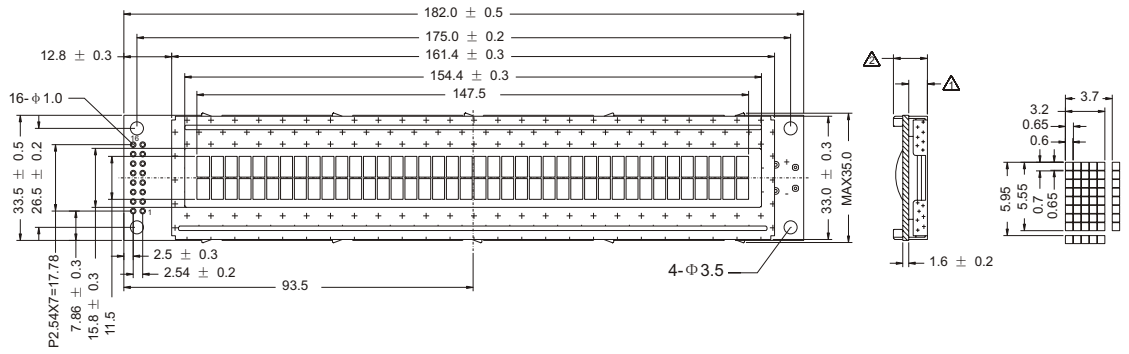

⚠ 4.7±0.3(WITHOUT BACKLIGHT)/9.3±0.3(WITH BACKLIGHT)
⚠ MAX9.6(WITHOUT BACKLIGHT)/MAX13.6(WITH BACKLIGHT)

MECHANICAL DATA

ITEM	SPECIFICATION	UNIT
Module Size (W x H x T)	182.0 x 33.5 x 9.6/13.6	mm
Viewing Area (W x H)	154.4 x 15.8	mm
Character Font (W x H)	5.0 x 7.0 with cursor	dots
Character Size (W x H)	3.2 x 5.55	mm
Character Pitch (W x H)	3.7 x 5.95	mm
Dot Size (W x H)	0.6 x 0.65	mm

ABSOLUTE MAXIMUM RATINGS

PARAMETER	SYMBOL	MIN.	MAX.	UNIT
Supply Voltage Logic	V_{DD} - V_{SS}	-0.3	7.0	V
Supply Voltage Drive	V_{DD} - V_{EE}	3.0	11.0	V
Input Voltage	V_{IN}	-0.3	V_{DD} +0.3	V
Operating Temperature	See page 8			
Storage Temperature				

PIN CONFIGURATION

PIN	SYMBOL	SIGNAL DESCRIPTION
1	V_{SS}	GND (0 V)
2	V_{DD}	Power Supply (+5.0V)
3	V_{EE}	Supply Voltage LCD Driver
4	RS	Register Select – LOW = Instruction, HIGH=DATA
5	R/W	Read / Write LOW = MPU to LCM, HIGH = LCM to MPU
6	E	Enable R/W = LOW: Data are talking over at falling edge R/W = HIGH: Data can be read at E = 1
7 to 14	DB_0 to DB_7	Data Bus – Software selectable 4 or 8 bit Mode
15	A	Anode of LED Unit
16	K	Cathode of LED Unit

ELECTRICAL CHARACTERISTICS, Ta = 25°C

ITEM		SYMBOL	CONDITION	SPEC. VALUE			UNIT
				MIN.	TYP.	MAX.	
Supply Voltage (Logic)		V_{DD} - V_{SS}		4.5	5.0	5.5	V
Supply Current (Logic)		I_{DD}	V_{DD} =5V		0.8	2.0	mA
Input Voltage	HIGH	V_{IH}		2.2		V_{DD}	V
	LOW	V_{IL}		-0.3		0.6	V
Output Voltage	HIGH	V_{OH}	I_{OH}=0.2mA	2.4			V
	LOW	V_{OL}	I_{OL}=1.2mA			0.4	V
LCD Operating Voltage		V_{DD} - V_{EE}	V_{DD} =5V Ta=+25°C	4.5	4.7	5.0	V
Supply Current LCD Drive		I_{EE}			1.0	2.2	mA

Note (1): Value is high reliability type. Note (2): Electro-Optical Characteristics: See page 5.

BLOCK DIAGRAM

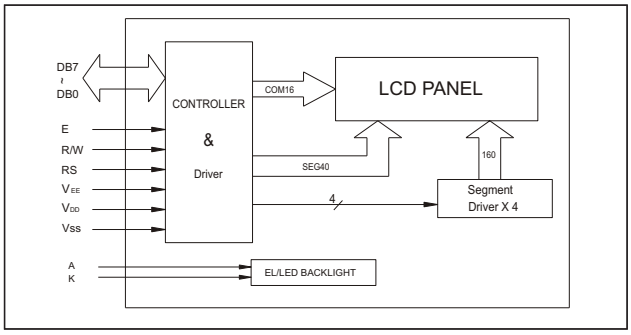

BACKLIGHTING CHARACTERISTICS, Ta = 25°C, LED

ITEM	SYMBOL	CONDITION	SPEC. VALUE			UNIT
			MIN.	TYP.	MAX.	
Supply Voltage	V_{LED}		3.0	3.3	3.6	V
Power Consumption	P_{LED}	I_F=40mA		132		mW
Luminous	I_V	I_F=40mA	80	100		cd/m^2

digital electronic gmbh • Tel. +49 (0) 8221/708-0 Fax. +49 (0) 8221/708-80

All specifications subject to change without notice.

STANDARD CHARACTER MODULES

YMS 404-01

40 CHAR x 4 LINE, 1/16 DUTY, 1/5 BIAS

EXTERNAL DIMENSION AND DISPLAY PATTERN

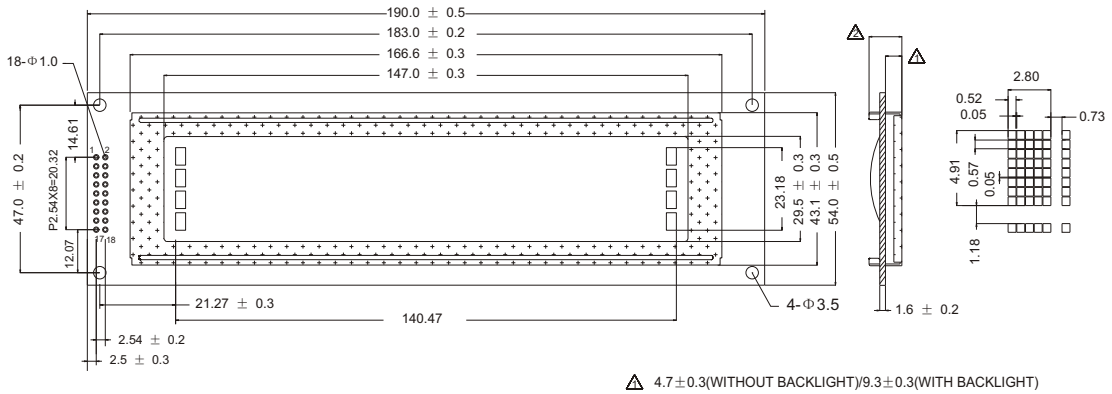

△1 4.7±0.3(WITHOUT BACKLIGHT)/9.3±0.3(WITH BACKLIGHT)
△2 MAX9.6(WITHOUT BACKLIGHT)/MAX13.6(WITH BACKLIGHT)

MECHANICAL DATA

ITEM	SPECIFICATION	UNIT
Module Size (W x H x T)	190.0 x 54.0 x 9.2/14.5	mm
Viewing Area (W x H)	147.0 x 29.5	mm
Character Font (W x H)	5.0 x 7.0 with cursor	dots
Character Size (W x H)	2.8 x 4.91	mm
Character Pitch (W x H)	3.53 x 6.09	mm
Dot Size (W x H)	0.52 x 0.57	mm

ABSOLUTE MAXIMUM RATINGS

PARAMETER	SYMBOL	MIN.	MAX.	UNIT
Supply Voltage Logic	V_{DD} - V_{SS}	-0.3	7.0	V
Supply Voltage Drive	V_{DD} - V_{EE}	3.0	11.0	V
Input Voltage	V_{IN}	-0.3	V_{DD} +0.3	V
Operating Temperature	See page 8			
Storage Temperature				

PIN CONFIGURATION

PIN	SYMBOL	SIGNAL DESCRIPTION
1 to 8	DB_7 to DB_0	Data Bus – Software selectable 4 or 8 bit Mode
9	E1	Enable R/W = LOW: Data are talking over at falling edge R/W = High: Data can be read at E = 1
10	R/W	Read / Write LOW = MPU to LCM, HIGH = LCM to MPU
11	RS	Register Select – LOW = Instruction, HIGH=DATA
12	V_{EE}	Supply Voltage LCD Driver
13	V_{SS}	GND (0 V)
14	V_{DD}	Power Supply (+5.0V)
15	E2	Enable R/W = LOW: Data are talking over at falling edge R/W = HIGH: Data can be read at E = 1
16	N/C	N/C
17	A	Anode of LED Unit
18	K	Cathode of LED Unit

ELECTRICAL CHARACTERISTICS, Ta = 25°C

ITEM		SYMBOL	CONDITION	SPEC. VALUE MIN.	TYP.	MAX.	UNIT
Supply Voltage (Logic)		V_{DD} - V_{SS}		4.5	5.0	5.5	V
Supply Current (Logic)		I_{DD}	V_{DD} =5V		0.8	2.0	mA
Input Voltage	HIGH	V_{IH}		2.2		V_{DD}	V
	LOW	V_{IL}		-0.3		0.6	V
Output Voltage	HIGH	V_{OH}	I_{OH}=0.2mA	2.4			V
	LOW	V_{OL}	I_{OL}=1.2mA			0.4	V
LCD Operating Voltage		V_{DD} - V_{EE}	V_{DD} =5V Ta=+25°C	4.5	4.7	5.0	V
Supply Current LCD Drive		I_{EE}			1.0	1.7	mA

Note (1): Value is high reliability type. Note (2):Electro-Optical Characteristics: See page 5.

BLOCK DIAGRAM

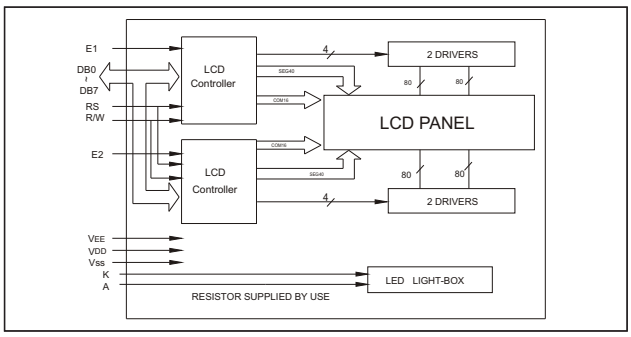

BACKLIGHTING CHARACTERISTICS, Ta = 25°C, LED

ITEM	SYMBOL	CONDITION	SPEC. VALUE MIN.	TYP.	MAX.	UNIT
Supply Voltage	V_{LED}			4.1		V
Power Consumption	P_{LED}	I_F=500mA		1000		mW
Luminous	I_V	I_F=500mA	60	80		cd/m²

STANDARD GRAPHIC MODULES

YMS 12232-01

122 X 32 DOTS, 1/32 DUTY, 1/5 BIAS

INTERFACE TIMING CHARACTERISTICS

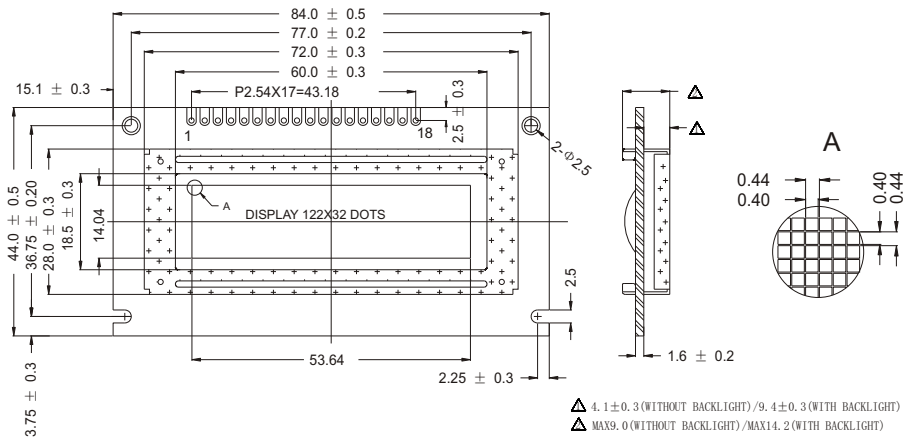

MECHANICAL DATA

ITEM	SPECIFICATION	UNIT
Module Size (W x H x T)	84.0 x 44.0 x 9.0/14.2	mm
Viewing Area (W x H)	60.0 x 18.5	mm
Number of Dots	122 x 32	dots
Dot Pitch (W x H)	0.44 x 0.44	mm
Dot Size (W x H)	0.4 x 0.4	mm

ABSOLUTE MAXIMUM RATINGS

PARAMETER	SYMBOL	MIN.	MAX.	UNIT
Supply Voltage Logic	V_{DD} - V_{SS}	-0.3	8.0	V
Supply Voltage Drive	V_{DD} - V_{EE}	-0.3	16.5	V
Input Voltage	V_{IN}	-0.3	V_{DD} +0.3	V
Operating Temperature	See page 8			
Storage Temperature				

PIN CONFIGURATION

PIN	SYMBOL	LEVEL	SIGNAL DESCRIPTION
1	V_{SS}	0V	GND (0 V)
2	V_{DD}	+5V	Supply oltage for Logic and LCD
3	V_0		Operating Voltage for LCD (variable)
4	A0	H/L	Register Select – LOW = Instruction, HIGH=DATA
5	E1	H/L	Enable R/W = LOW: Data are talking over at falling edge R/W = HIGH: Data can be read at E = 1
6	E2		
7	R/W	H/L	Read / Write LOW = MPU to LCM, HIGH=Data
8	DB_0	H/L	Data Bit 0
9	DB_1	H/L	Data Bit 1
10	DB_2	H/L	Data Bit 2
11	DB_3	H/L	Data Bit 3
12	DB_4	H/L	Data Bit 4
13	DB_5	H/L	Data Bit 5
14	DB_6	H/L	Data Bit 6
15	DB_7	H/L	Data Bit 7
16	/RES	H/L	Reset Signal
17	A	Anode of LED Unit	
18	K	Cathode of LED Unit	

BLOCK DIAGRAM

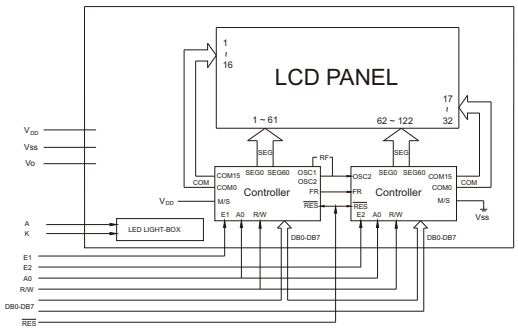

BACKLIGHTING CHARACTERISTICS, Ta = 25°C, LED

ITEM	SYMBOL	CONDITION	SPEC. VALUE			UNIT
			MIN.	TYP.	MAX.	
Supply Voltage	V_{LED}		3.95	4.1	4.25	V
Power Consumption	P_{LED}	I_F=90mA		369	900	mW
Luminous	I_V	I_F=90mA				cd/m²

digital electronic gmbh • Tel. +49 (0) 8221/708-0 Fax. +49 (0) 8221/708-80

All specifications subject to change without notice.

STANDARD GRAPHIC MODULES

YMS 12232-01

122 X 32 DOTS, 1/32 DUTY, 1/5 BIAS

EXTERNAL DIMENSION AND DISPLAY PATTERN

Interface Family 8080

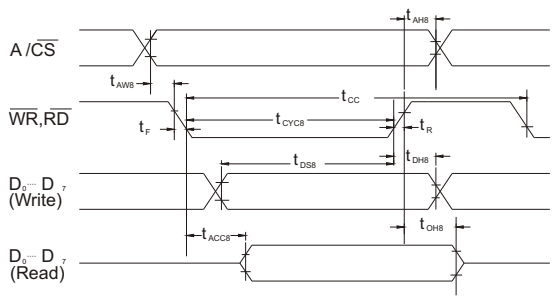

Interface Family 6800

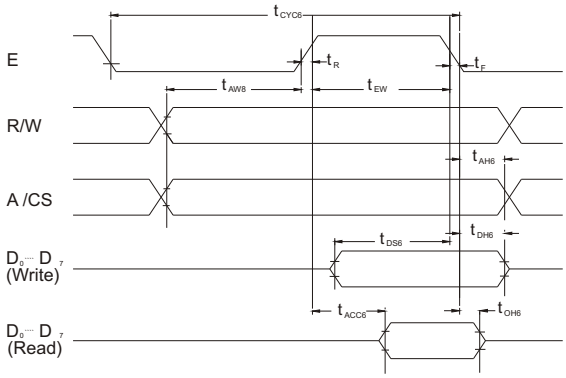

ELECTRICAL CHARACTERISTICS, Ta = 25°C

ITEM		SYMBOL	CONDITION	SPEC. VALUE			UNIT
				MIN.	TYP.	MAX.	
Supply Voltage (Logic)		V_{DD} - V_{SS}		4.5	5.0	5.5	V
Supply Current (Logic)		I_{DD}	V_{DD} =5V		0.5	1.0	mA
Input Voltage	HIGH	V_{IH}		0.8 V_{DD}		V_{DD}	V
	LOW	V_{IL}		V_{SS}		0.3 V_{DD}	V
Output Voltage	HIGH	V_{OH}	I_{OH}=3.0mA	V_{DD} +2.4			V
	LOW	V_{OL}	I_{OL}=3.0mA			V_{DD} +0.4	V
LCD Operating Voltage		V_{DD} - V_0	V_{DD} =5V Ta=+25°C		5.0		V
Supply Current LCD Drive		I_0			1.0	1.5	mA

Note (1): Value is high reliability type. Note (2): Electro-Optical Characteristics: See page 5.

SWITCHING TIMING CHARACTERISTICS

PARAMETER	SYMBOL	MIN.	MAX.	UNIT
Address Hold Time	t_{AH8}	10		ns
Address Setup Time	t_{AW8}	20		ns
System Cycle Time	t_{CYC8}	1000		ns
Control Pulse Width	t_{CC}	200		ns
Data Setup Time	t_{DS8}	80		ns
Data Hold Time	t_{DH8}	10		ns
RD Access Time	t_{ACC8}		90	ns
Output Disable Time	t_{OH8}	10	60	ns
Rise and Fall Time	t_R t_F		15	ns

Condition: V_{DD}=+5.0, V_{SS}=0V, Ta=+25°C

PARAMETER		SYMBOL	MIN.	MAX.	UNIT
Address Hold Time		t_{AH8}	10		ns
Address Setup Time		t_{AW8}	20		ns
Data Setup Time		t_{CYC6}	1000		ns
Data Hold Time		t_{DS6}	80		ns
Data Setup Time		t_{DH6}	10		ns
Output Disable Time		t_{OH8}	10	60	ns
Access Time		t_{ACC8}		90	ns
Enable Low	READ	t_{EW}	100		ns
Pulse Width	WRITE		80		ns
Rise and Fall Time		t_R t_F		15	ns

Condition: V_{DD}=+5.0, V_{SS}=0V, Ta=+25°C

STANDARD GRAPHIC MODULES

YMC 12232-03

122 X 32 DOTS, 1/32 DUTY, 1/5 BIAS

EXTERNAL DIMENSION AND DISPLAY PATTERN

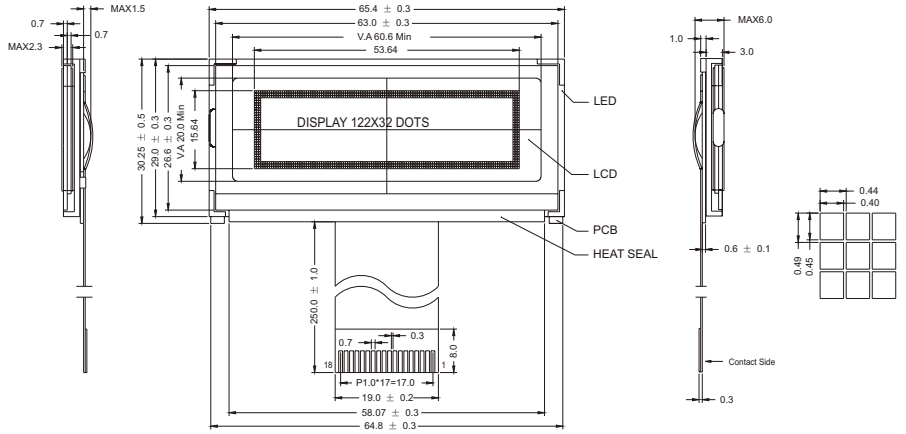

MECHANICAL DATA

ITEM	SPECIFICATION	UNIT
Module Size (W x H x T)	65.4 x 30.25 x 6.0	mm
Viewing Area (W x H)	60.6 x 20.0	mm
Number of Dots	122 x 32 with cursor	dots
Dot Pitch (W x H)	0.40 x 0.45	mm
Dot Size (W x H)	0.44 x 0.49	mm

ABSOLUTE MAXIMUM RATINGS

PARAMETER	SYMBOL	MIN.	MAX.	UNIT
Supply Voltage Logic	V_{DD} - V_{SS}	-0.3	8.0	V
Supply Voltage Drive	V_{DD} - V_{EE}	-0.3	13.5	V
Input Voltage	V_{IN}	-0.3	V_{DD} +0.3	V
Operating Temperature	See page 8			
Storage Temperature				

PIN CONFIGURATION

PIN	SYMBOL	SIGNAL DESCRIPTION
1	V_{DD}	Logic Supply Voltage (+5.0V)
2	V_{SS}	Ground (0V)
3	V_0	Power Supply for LCD Driving
4	RES	Reset Signal
5	E1	Enable Clock
6	E2	Enable Clock
7	R/W	Read / Write Select
8	A_0	Identify the Data or a Command
9-16	DB_0 - DB_7	Data Bus Line
17-18	LED+, LED-	LED Backlight

BLOCK DIAGRAM

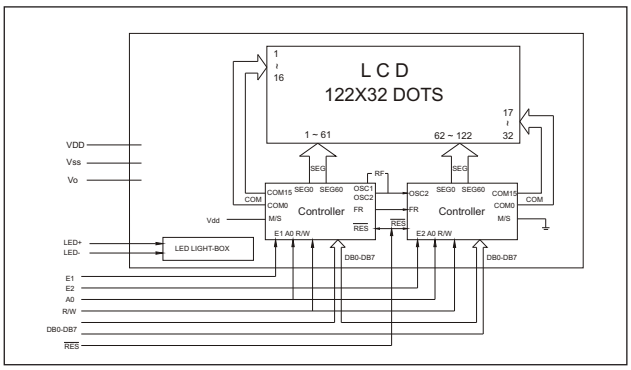

ELECTRICAL CHARACTERISTICS, Ta = 25°C

ITEM		SYMBOL	CONDITION	SPEC. VALUE			UNIT
				MIN.	TYP.	MAX.	
Supply Voltage (Logic)		V_{DD} - V_{SS}		4.5	5.0	5.5	V
Supply Current (Logic)		I_{DD}	V_{DD} =5V		0.5	1.0	mA
Input Voltage	HIGH	V_{IH}		0.8 V_{DD}		V_{DD}	V
	LOW	V_{IL}		V_{SS}		0.3 V_{DD}	V
Output Voltage	HIGH	V_{OH}	I_{OH} =3.0mA	V_{DD} +2.4			V
	LOW	V_{OL}	I_{OL} =3.0mA			V_{DD} +0.4	V
LCD Operating Voltage		V_{DD} - V_0	V_{DD} =5V Ta=+25°C		5.0		V
Supply Current LCD Drive		I_{EE}			1.0	1.5	mA

Note (1): Value is high reliability type. Note (2): Electro-Optical Characteristics: See page 5.

BACKLIGHTING CHARACTERISTICS, Ta = 25°C, LED

ITEM	SYMBOL	CONDITION	SPEC. VALUE			UNIT
			MIN.	TYP.	MAX.	
Supply Voltage	V_{LED}	I_F=140mA		2.1	2.3	V
Power Consumption	P_{LED}	I_F=140mA		0.29		W
Luminous	I_V	I_F=140mA		25		cd/m^2

digital electronic gmbh • Tel. +49 (0) 8221/708-0 Fax. +49 (0) 8221/708-80

All specifications subject to change without notice.

STANDARD GRAPHIC MODULES

YMC 12232-03

122 X 32 DOTS, 1/32 DUTY, 1/5 BIAS

INTERFACE TIMING CHARACTERISTICS

Read / Write Timing for the 80-Port MPU

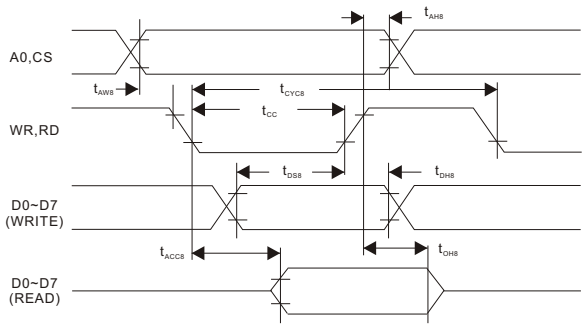

Read / Write Timing for the 68-Port MPU

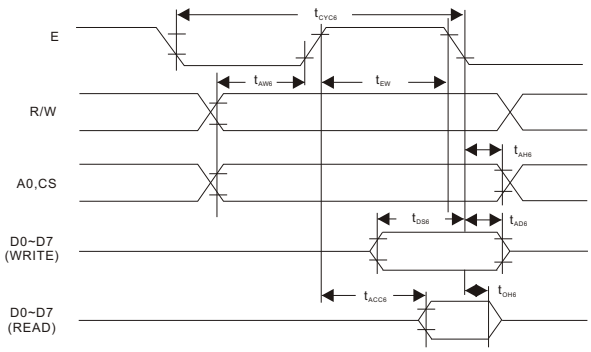

SWITCHING TIMING CHARACTERISTICS: READ/WRITE TIMING FOR THE 80-PORT MPU, Ta = -25°C ~ 75°C

PARAMETER	SIGNAL	SYMBOL	CONDITION	RATING			
				MIN.	TYP.	MAX.	UNIT
Address Hold Time	A_0, CS	t_{AH8}	V_{SS}= -5V V_{SS}= -3V	10 20			ns
Address Setup Time		t_{AW8}	V_{SS}= -5V V_{SS}= -3V	20 40			ns
System Cycle Time	WR, RD	t_{CYC8}	V_{SS}= -5V V_{SS}= -3V	1000 2000			ns
Control Pulse Width		t_{CC}	V_{SS}= -5V V_{SS}= -3V	200 400			ns
Data Setup Time	D_0 - D_7	t_{DS8}	V_{SS}= -5V V_{SS}= -3V	80 160			ns
Data Hold Time		t_{DH8}	V_{SS}= -5V V_{SS}= -3V	10 20			ns
RD Access Time		t_{ACC8}	V_{SS}= -5V V_{SS}= -3V			90 180	ns
Output Disable Time		t_{OH8}	CL= 100pF CL= 100pF, V_{SS}= -3V	10 20		60 120	ns

SWITCHING TIMING CHARACTERISTICS: READ/WRITE TIMING FOR THE 68-PORT MPU, Ta = -25°C ~ 75°C

PARAMETER	SIGNAL	SYMBOL	CONDITION	RATING			
				MIN.	TYP.	MAX.	UNIT
Address Hold Time	A_0, CS, R/W	t_{AH6}	V_{SS}= -5V V_{SS}= -3V	10 30			ns
Address Setup Time		t_{AW6}	V_{SS}= -5V V_{SS}= -3V	20 40			ns
System Cycle Time		t_{CYC6}	V_{SS}= -5V V_{SS}= -3V	1000 2000			ns
Control Pulse Width		t_{DS6}	V_{SS}= -5V V_{SS}= -3V	80 160			ns
Data Setup Time		t_{DH6}	V_{SS}= -5V V_{SS}= -3V	10 20			ns
Data Hold Time		t_{OH6}	CL= 100pF, V_{SS}= -5V	10 20		60 120	ns
RD Access Time		t_{ACC6}	CL= 100pF, V_{SS}= -5V			90 180	ns
Enable/Disable Time	READ WRITE	E	V_{SS}= -5V V_{SS}= -3V tew V_{SS}= -5V V_{SS}= -3V	100 200 80 160			ns

Condition: t_{CYC6} indicates the cacle during which CS/E are high; it doesn´t indicate are cycle of the E signal.

STANDARD GRAPHIC MODULES

YMS 12864-01

128 X 64 DOTS, 1/64 DUTY, 1/9 BIAS

EXTERNAL DIMENSION AND DISPLAY PATTERN

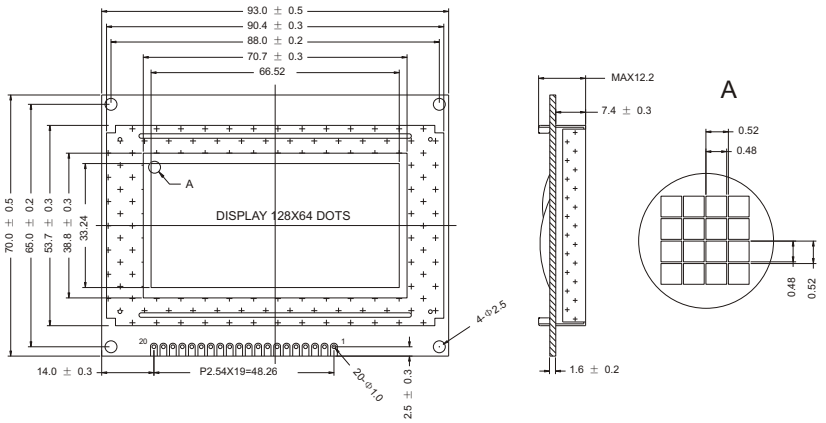

MECHANICAL DATA

ITEM	SPECIFICATION	UNIT
Module Size (W x H x T)	93.0 x 70.0 x 12.2	mm
Viewing Area (W x H)	70.7 x 38.8	mm
Number of Dots	128 x 64	dots
Dot Pitch (W x H)	0.52 x 0.52	mm
Dot Size (W x H)	0.48 x 0.48	mm

ABSOLUTE MAXIMUM RATINGS

PARAMETER	SYMBOL	MIN.	MAX.	UNIT
Supply Voltage Logic	V_{DD} (V_{DD} - V_{SS})	-0.3	7.0	V
Supply Voltage Drive	V_{DD} - V_{EE}	-0.3	18.0	V
Input Voltage	V_{IN}	-0.3	V_{DD} +0.3	V
Operating Temperature	See page 8			
Storage Temperature				

PIN CONFIGURATION

PIN	SYMBOL	LEVEL	SIGNAL DESCRIPTION
1	V_{SS}	0V	GND (0 V)
2	V_{DD}	+5V	Supply Voltage for Logic and LCD
3	V_{EE}		Operating Voltage for LCD (variable)
4	RS	H/L	H: DATA, L: Instruction Code
5	R/W	H/L	H: Read (Module-MPU), L: Write (MPU-Module)
6	E	H, H-L	Chip Enable Signal
7	DB_0	H/L	Data Bit 0
8	DB_1	H/L	Data Bit 1
9	DB_2	H/L	Data Bit 2
10	DB_3	H/L	Data Bit 3
11	DB_4	H/L	Data Bit 4
12	DB_5	H/L	Data Bit 5
13	DB_6	H/L	Data Bit 6
14	DB_7	H/L	Data Bit 7
15	CS_1	H/L	Chip Select Signal for IC 1
16	CS_2	H/L	Chip Select Signal for IC 2
17	/RES	H, H-L	Reset Signal
18	V_{OUT}		Power Supply Voltage for LCD
19	A	Anode of LED Unit	
20	K	Cathode of LED Unit	

BLOCK DIAGRAM

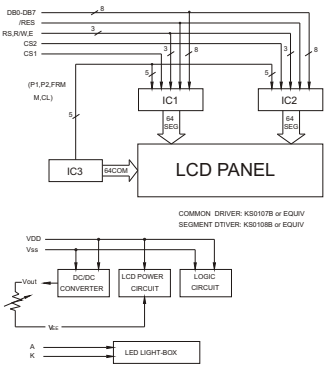

digital electronic gmbh • Tel. +49 (0) 8221/708-0 Fax. +49 (0) 8221/708-80

All specifications subject to change without notice.

STANDARD GRAPHIC MODULES

YMS 12864-01

128 X 64 DOTS, 1/64 DUTY, 1/9 BIAS

ELECTRICAL CHARACTERISTICS, Ta = 25°C

ITEM		SYMBOL	CONDITION	SPEC. VALUE			UNIT
				MIN.	TYP.	MAX.	
Supply Voltage (Logic)		V_{DD} - V_{SS}		4.5	5.0	5.5	V
Supply Current (Logic)		I_{DD}	V_{DD} =5V		3.0	4.5	mA
Input Voltage	HIGH	V_{IH}		0.7 V_{DD}		V_{DD}	V
	LOW	V_{IL}		0		0.3 V_{DD}	V
Output Voltage	HIGH	V_{OH}	I_{OH}=0.205mA	2.4			V
	LOW	V_{OL}	I_{OL} =1.6mA			0.4	V
LCD Operating Voltage		V_{DD} - V_{EE}	V_{DD} =5V Ta=+25°C		13.5		V
Supply Current LCD Drive		I_{EE}			3.0	4.5	mA

Note (1): Value is high reliability type. Note (2): Electro-Optical Characteristics: See page 5.

BACKLIGHTING CHARACTERISTICS, Ta = 25°C, LED

ITEM	SYMBOL	CONDITION	SPEC. VALUE			UNIT
			MIN.	TYP.	MAX.	
Supply Voltage	V_{LED}		3.9	4.15	4.3	V
Power Consumption	P_{LED}	I_F=180mA		738		mW
Luminous	I_V	I_F=180mA	51	69		cd/m²

INTERFACE TIMING CHARACTERISTICS

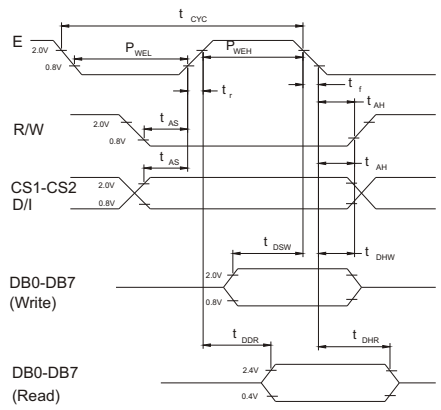

PARAMETER	SYMBOL	MIN.	MAX.	UNIT
Address Hold Time	t_{AH}	10		ns
Address Setup Time	t_{AS}	140		ns
E Cycle Time	t_{CYC}	1000		ns
E High Level Width	t_{WEH}	450		ns
E Low Level Width	t_{WEL}	450		ns
E Rise Time	t_R		25	ns
E Fall Time	t_F		25	ns
Data Setup Time	t_{DSW}	200		ns
Data Delay Time	t_{DDR}		320	
Data Hold Time - Write	t_{DHW}	10		ns
Data Hold Time - Read	t_{DHR}	20		ns

Condition: V_{DD}=+5.0 ±10%, V_{SS}=0V, Ta=+25°C

STANDARD GRAPHIC MODULES

YMS 12864-04

128 X 64 DOTS, 1/64 DUTY, 1/9 BIAS

EXTERNAL DIMENSION AND DISPLAY PATTERN

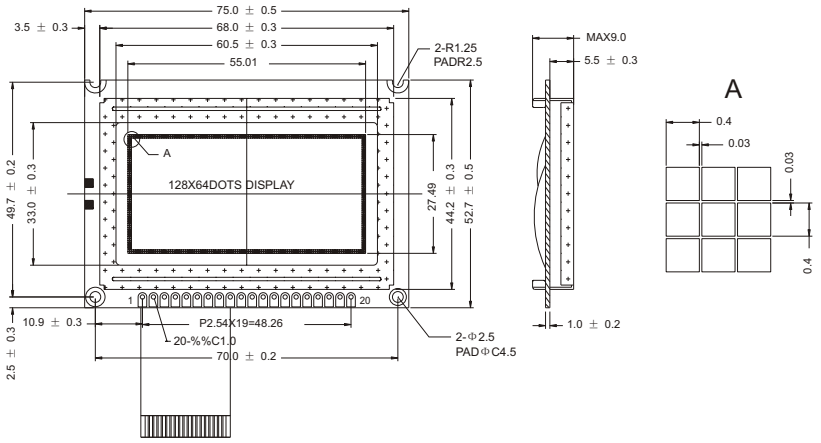

MECHANICAL DATA

ITEM	SPECIFICATION	UNIT
Module Size (W x H x T)	75.0 x 52.7 x 9.0	mm
Viewing Area (W x H)	60.5 x 33.0	mm
Number of Dots	128 x 64	dots
Dot Pitch (W x H)	0.43 x 0.43	mm
Dot Size (W x H)	0.40 x 0.40	mm

ABSOLUTE MAXIMUM RATINGS

PARAMETER	SYMBOL	MIN.	MAX.	UNIT
Supply Voltage Logic	V_{DD} (V_{DD} - V_{SS})	-0.3	7.0	V
Supply Voltage Drive	V_{DD} - V_{EE}	-0.3	18.0	V
Input Voltage	V_{IN}	-0.3	V_{DD} +0.3	V
Operating Temperature	See page 8			
Storage Temperature				

PIN CONFIGURATION

PIN	SYMBOL	LEVEL	SIGNAL DESCRIPTION
1	V_{SS}	0V	GND (0 V)
2	V_{DD}	+5V	Supply Voltage for Logic and LCD
3	V_{EE}		Operating Voltage for LCD (variable)
4	RS	H/L	H: DATA, L: Instruction Code
5	R/W	H/L	H: Read (Module-MPU), L: Write (MPU-Module)
6	E	H, H-L	Chip Enable Signal
7	DB_0	H/L	Data Bit 0
8	DB_1	H/L	Data Bit 1
9	DB_2	H/L	Data Bit 2
10	DB_3	H/L	Data Bit 3
11	DB_4	H/L	Data Bit 4
12	DB_5	H/L	Data Bit 5
13	DB_6	H/L	Data Bit 6
14	DB_7	H/L	Data Bit 7
15	CS_1	H/L	Chip Select Signal for IC 1
16	CS_2	H/L	Chip Select Signal for IC 2
17	/RES	H, H-L	Reset Signal
18	V_{OUT}		Power Supply Voltage for LCD
19	A	Anode of LED Unit	
20	K	Cathode of LED Unit	

BLOCK DIAGRAM

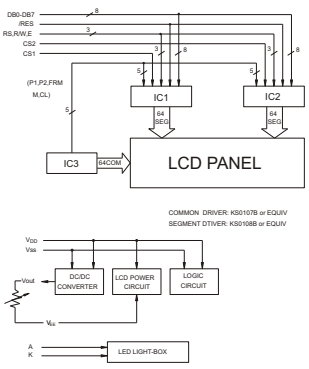

digital electronic gmbh • Tel. +49 (0) 8221/708-0 Fax. +49 (0) 8221/708-80

All specifications subject to change without notice.

STANDARD GRAPHIC MODULES

YMS 12864-04

128 X 64 DOTS, 1/64 DUTY, 1/9 BIAS

ELECTRICAL CHARACTERISTICS, Ta = 25°C

ITEM		SYMBOL	CONDITION	SPEC. VALUE			UNIT
				MIN.	TYP.	MAX.	
Supply Voltage (Logic)		V_{DD} - V_{SS}		4.5	5.0	5.5	V
Supply Current (Logic)		I_{DD}	V_{DD} =5V		3.0	4.5	mA
Input Voltage	HIGH	V_{IH}		0.7 V_{DD}		V_{DD}	V
	LOW	V_{IL}		0		0.3 V_{DD}	V
Output Voltage	HIGH	V_{OH}	I_{OH}=0.205mA	2.4			V
	LOW	V_{OL}	I_{OL} =1.6mA			0.4	V
LCD Operating Voltage		V_{DD} - V_{EE}	V_{DD} =5V Ta=+25°C		9.7		V
Supply Current LCD Drive		I_{EE}			3.0	4.5	mA

Note (1): Value is high reliability type. Note (2): Electro-Optical Characteristics: See page 5.

BACKLIGHTING CHARACTERISTICS, Ta = 25°C, LED

ITEM	SYMBOL	CONDITION	SPEC. VALUE			UNIT
			MIN.	TYP.	MAX.	
Supply Voltage	V_{LED}			4.1		V
Power Consumption	P_{LED}	I_F=100mA		410		mW
Luminous	I_V	I_F=100mA		60		cd/m²

INTERFACE TIMING CHARACTERISTICS

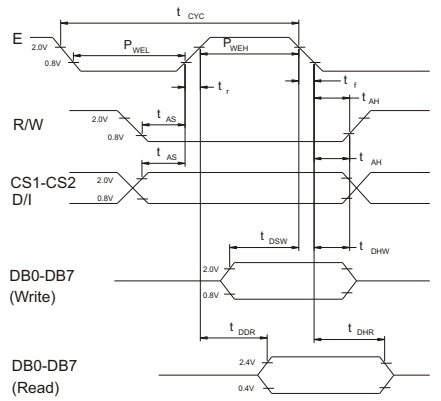

PARAMETER	SYMBOL	MIN.	MAX.	UNIT
Address Hold Time	t_{AH}	10		ns
Address Setup Time	t_{AS}	140		ns
E Cycle Time	t_{CYC}	1000		ns
E High Level Width	t_{WEH}	450		ns
E Low Level Width	t_{WEL}	450		ns
E Rise Time	t_R		25	ns
E Fall Time	t_F		25	ns
Data Setup Time	t_{DSW}	200		ns
Data Delay Time	t_{DDR}		320	
Data Hold Time - Write	t_{DHW}	10		ns
Data Hold Time - Read	t_{DHR}	20		ns

Condition: V_{DD}=+5.0 ±10%, V_{SS}=0V, Ta=+25°C

STANDARD GRAPHIC MODULES

YMS 128128-01

128 X 128 DOTS, 1/128 DUTY, 1/12 BIAS

EXTERNAL DIMENSION AND DISPLAY PATTERN

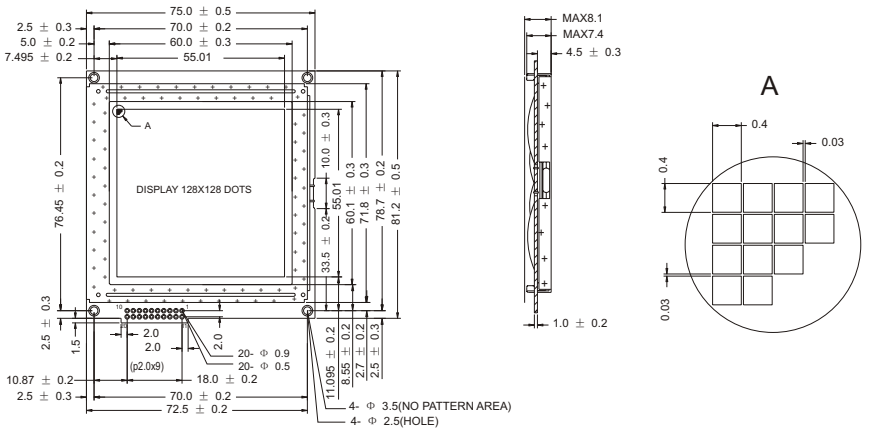

MECHANICAL DATA

ITEM	SPECIFICATION	UNIT
Module Size (W x H x T)	75.0 x 81.2 x 8.1	mm
Viewing Area (W x H)	60.0 x 60.1	mm
Number of Dots	128 x 128	dots
Dot Pitch (W x H)	0.43 x 0.43	mm
Dot Size (W x H)	0.40 x 0.40	mm

ABSOLUTE MAXIMUM RATINGS

PARAMETER	SYMBOL	MIN.	MAX.	UNIT
Supply Voltage Logic	V_{DD} (V_{DD} - V_{SS})	-0.3	7.0	V
Supply Voltage Drive	V_{DD} - V_{EE}	-0.3	30.0	V
Input Voltage	V_{IN}	-0.3	V_{DD} +0.3	V
Operating Temperature	See page 8			
Storage Temperature				

PIN CONFIGURATION

PIN	SYMBOL	LEVEL	SIGNAL DESCRIPTION
1	V_{DD}	+5V	Supply Voltage for Logic and LCD
2	V_{SS}	0V	GND (0 V)
3	V_{EE}		Operating Voltage for LCD (variable)
4	DB_0	H/L	Data Bit 0
5	DB_1	H/L	Data Bit 1
6	DB_2	H/L	Data Bit 2
7	DB_3	H/L	Data Bit 3
8	DB_4	H/L	Data Bit 4
9	DB_5	H/L	Data Bit 5
10	DB_6	H/L	Data Bit 6
11	DB_7	H/L	Data Bit 7
12	CS_1	H/L	Chip Select Signal for IC 1
13	CS_2	H/L	Chip Select Signal for IC 2
14	/RES	H, H-L	Reset Signal
15	R/W	H, H-L	H: Read (Module-MPU), L: Write (MPU-Module)
16	DL	H/L	H: DATA, L: Instruction Code
17	E	H, H-L	Chip Enable Signal
18	V_{SS}	0V	Power Supply Voltage for LCD
19	EL	EL Power	
20	EL		

BLOCK DIAGRAM

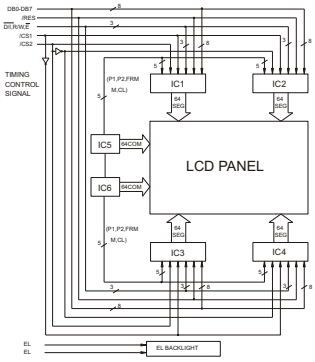

digital electronic gmbh • Tel. +49 (0) 8221/708-0 Fax. +49 (0) 8221/708-80

All specifications subject to change without notice.

STANDARD GRAPHIC MODULES

YMS 128128-01

128 X 128 DOTS, 1/128 DUTY, 1/12 BIAS

ELECTRICAL CHARACTERISTICS, Ta = 25°C

ITEM		SYMBOL	CONDITION	SPEC. VALUE			UNIT
				MIN.	TYP.	MAX.	
Supply Voltage (Logic)		V_{DD} - V_{SS}		4.5	5.0	5.5	V
Supply Current (Logic)		I_{DD}	V_{DD} =5V		3.0	4.5	mA
Input Voltage	HIGH	V_{IH}		0.7 V_{DD}		V_{DD}	V
	LOW	V_{IL}		0		0.3 V_{DD}	V
Output Voltage	HIGH	V_{OH}	I_{OH}=0.205mA	2.4			V
	LOW	V_{OL}	I_{OL} =1.6mA			0.4	V
LCD Operating Voltage		V_{DD} - V_{EE}	V_{DD} =5V Ta=+25°C		17.8		V
Supply Current LCD Drive		I_{EE}			9.8		mA

Note (1): Value is high reliability type. Note (2): Electro-Optical Characteristics: See page 5.

BACKLIGHTING CHARACTERISTICS, Ta = 25°C, LED

ITEM	SYMBOL	CONDITION	SPEC. VALUE			UNIT
			MIN.	TYP.	MAX.	
Applied Voltage	V_{EL}			100	150	V
Applied Frequency	F_{EL}			400		Hz
Current	I_{EL}	V_a= 100V rms F_a= 400 Hz		5.27	7.47	mA
Power Consumption	P_{EL}			527	747	mW
Luminous	I_V		45	55		cd/m²

INTERFACE TIMING CHARACTERISTICS

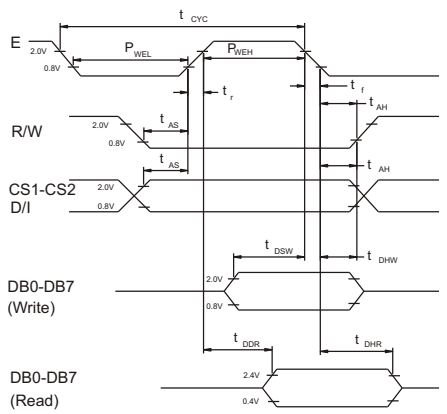

PARAMETER	SYMBOL	MIN.	MAX.	UNIT
Address Hold Time	t_{AH}	10		ns
Address Setup Time	t_{AS}	140		ns
E Cycle Time	t_{CYC}	1000		ns
E High Level Width	t_{WEH}	450		ns
E Low Level Width	t_{WEL}	450		ns
E Rise Time	t_R		25	ns
E Fall Time	t_F		25	ns
Data Setup Time	t_{DSW}	200		ns
Data Delay Time	t_{DDR}		320	
Data Hold Time - Write	t_{DHW}	10		ns
Data Hold Time - Read	t_{DHR}	20		ns

Condition: V_{DD}=+5.0 ±10%, V_{SS}=0V, Ta=+25°C

STANDARD GRAPHIC MODULES

YMC 160128-01

160 CHAR x 128 DOTS, 1/128 DUTY, 1/12 BIAS

EXTERNAL DIMENSION AND DISPLAY PATTERN

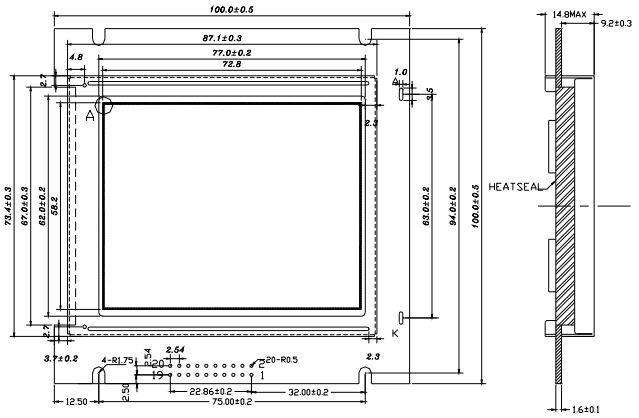

MECHANICAL DATA

ITEM	SPECIFICATION	UNIT
Module Size (W x H x T)	100.0 x 73.4 x 14.8	mm
Viewing Area (W x H)	77.0 x 62.0	mm
Number of Dots	160 x 128	dots
Character Pitch (W x H)	0.455 x 0.455	mm
Dot Size (W x H)	0.425 x 0.425	mm

ABSOLUTE MAXIMUM RATINGS

PARAMETER	SYMBOL	MIN.	MAX.	UNIT
Supply Voltage Logic	V_{DD} - V_{SS}	-0.3	7.0	V
Supply Voltage Drive	V_{DD} - V_{EE}			V
Input Voltage	V_{IN}	-0.3	V_{DD} +0.3	V
Operating Temperature	See page 8			
Storage Temperature				

PIN CONFIGURATION

PIN	SYMBOL	SIGNAL DESCRIPTION
1	FGND	Frame Ground
2	V_{SS}	Ground
3	V_{DD}	Supply Voltage for Logic and LCD
4	V_0	Contrast Adjust for LCD Driving
5	WR	Write Signal
6	RD	Read Signal
7	CE	Chip Enable Signal
8	C/D	H: Instruction Code; L: Data
9	LEDK	LED Backlight
10	RESET	Reset Signal
11-18	DB_0-DB_7	Data Bus Line
19	FS	Pins for Selection of Font
20	LEDA	LED Backlight

ELECTRICAL CHARACTERISTICS, V_{SS}=0V, V_{DD}=5.0V±10%

ITEM		SYMBOL	CONDITION	SPEC. VALUE			UNIT
				MIN.	TYP.	MAX.	
Supply Voltage (Logic)		V_{DD} - V_{SS}		4.5	5.0	5.5	V
Input Voltage	HIGH	V_{IH}		V_{DD}-2.2V		V_{DD}	V
	LOW	V_{IL}				0.8	V
Output Voltage	HIGH	V_{OH}		V_{DD}-0.3V		V_{DD}	V
	LOW	V_{OL}				0.3	V
	HIGH	R_{OH}	V_{OUT}=V_{DD}-0.5V			400	Ω
	LOW	R_{OL}	V_{OUT} = 0.5V			400	Ω
Input Pull-Up Resistance		R_{PU}		50	100	200	KΩ
Operating Frequency		F_{OSC}		0.4		5.5	MHz

Note (1): Applied / T1 / T2 / RESET Note (2): Electro-Optical Characteristics: See page 5;
MD_5=L, MD_0=L, MD_2=H, MD_3=H, FS_0=L, FS_1=L, /SDSEL=L, /DUL=H, D_7 to D_0 = LHLHLHLH

BLOCK DIAGRAM

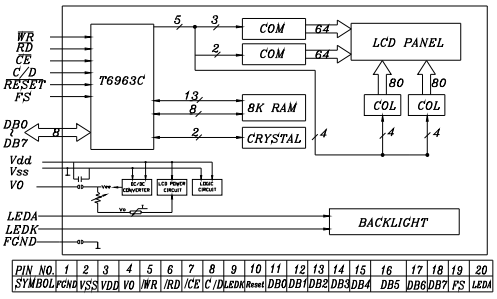

digital electronic gmbh • Tel. +49 (0) 8221/708-0 Fax. +49 (0) 8221/708-80

All specifications subject to change without notice.

STANDARD GRAPHIC MODULES

YMC 160128-01

160 CHAR x 128 DOTS, 1/128 DUTY, 1/12 BIAS

SWITCHING TIMING CHARACTERISTICS

AC Characteristics

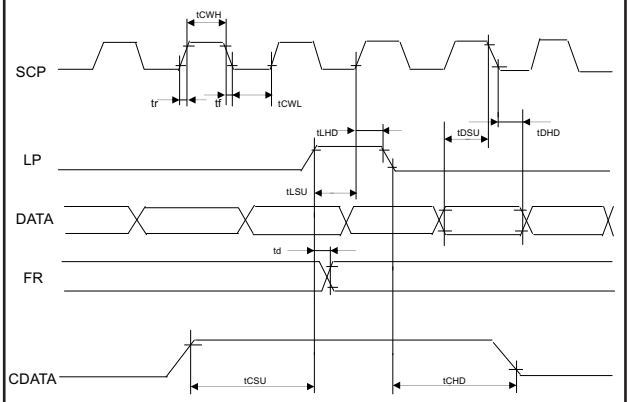

Bus Timing

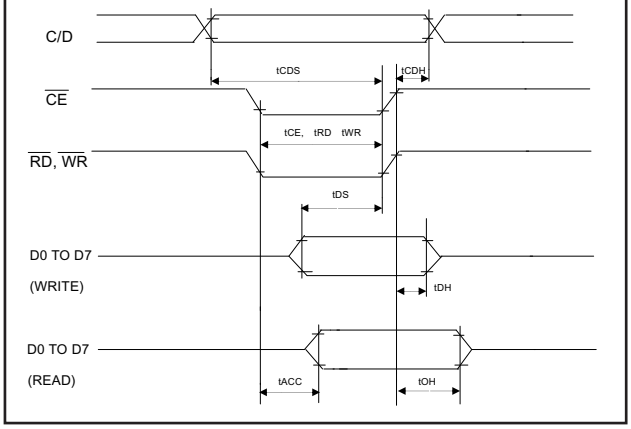

PARAMETER	SYMBOL	MIN.	MAX.	UNIT
Operating Frequency	f_{SCP}		2.75	MHz
SCP Pulse Width	t_{CWH}, t_{CWL}	150		ns
SCP Rise/Fall Time	t_r , t_f		30	ns
LP Setup Time	t_{LSU}	150	290	ns
LP Hold Time	t_{LHD}	5	40	ns
Data Setup Time	t_{DSU}	170		ns
Data Hold Time	t_{DHD}	80		ns
FR Delay Time	t_d	0	90	ns
CData Setup Time	t_{CSU}	450	850	ns
CData Hold Time	T_{CHD}	450	950	

Condition: V_{DD}=+5.0, V_{SS}=0V, Ta=+25°C

PARAMETER	SYMBOL	MIN.	MAX.	UNIT
C/D Setup Time	t_{CDS}	100		ns
C/D Hold Time	t_{CDH}	10		ns
/CE, /RD, /WR Pulse Width	t_{CE}, t_{RD}, t_{WR}	80		ns
Data Setup Time	t_{DS}	80		ns
Data Hold Time	t_{DH}	40		ns
Access Time	t_{ACC}		150	ns
Output Hold Time	t_{OH}	10	50	ns

Condition: V_{DD}=+5.0, V_{SS}=0V, Ta=+25°C

PARAMETER	SYMBOL	MIN.	MAX.	UNIT
Address Delay Time	t_{d1}		250	ns
CE Fall Delay Time (Read)	t_{d2}		180	ns
CE Rise Delay Time (Read)	t_{d3}		180	ns
Data Setup Time	t_{DS}	0		ns
Dta Hold Time	t_{DH}	30		ns
CE Fall Delay TIme (Write)	t_{d4}		200	ns
CE Rise Delay Time (Write)	t_{d5}		200	ns
R/W Fall Delay Time	t_{d6}		180	ns
R/W Rise Delay Time	t_{d7}		180	ns
Data Stable Time	t_{d8}		450	ns
Data Hold Time	t_{d9}		200	ns

Condition: V_{DD}=+5.0, V_{SS}=0V, Ta=+25°C

External RAM Read Mode

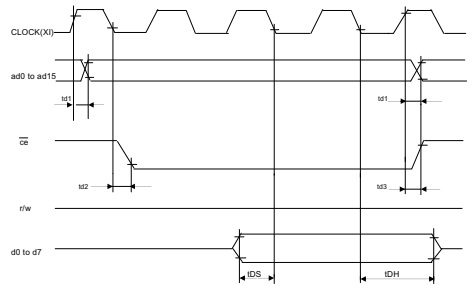

External RAM Write Mode

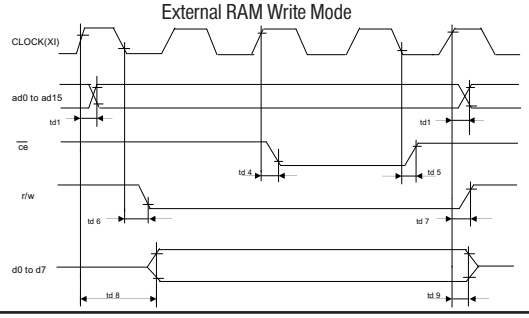

STANDARD GRAPHIC MODULES

YMC 16080-05

160 CHAR x 80 DOTS, 1/80 DUTY, 1/10 BIAS

EXTERNAL DIMENSION AND DISPLAY PATTERN

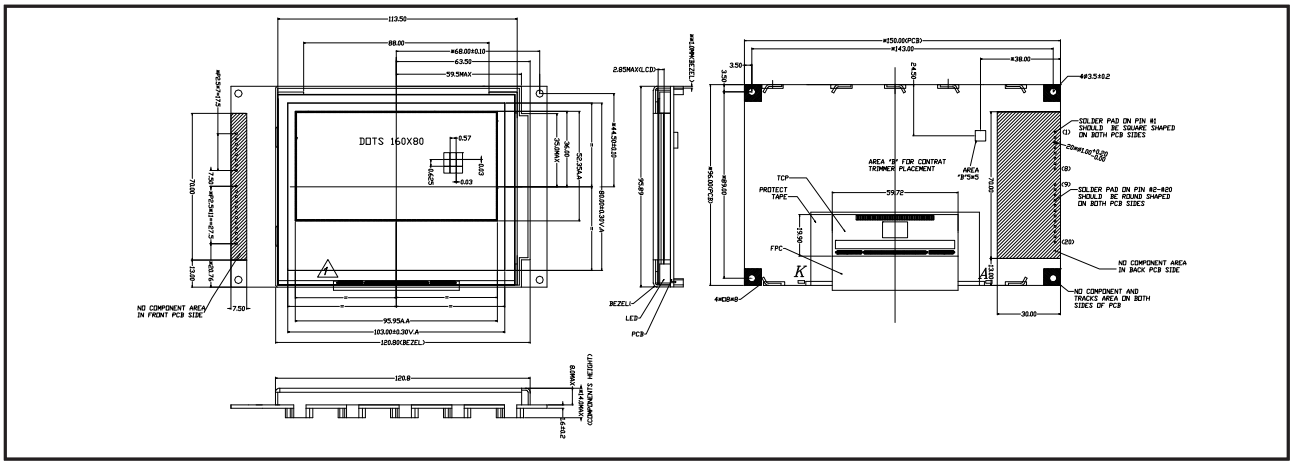

MECHANICAL DATA

ITEM	SPECIFICATION	UNIT
Module Size (W x H x T)	120.8 x 95.89 x 14.0	mm
Viewing Area (W x H)	103.0 x 80.0	mm
Number of Dots	160 x 80	dots
Character Pitch (W x H)	0.6 x 0.655	mm
Dot Size (W x H)	0.57 x 0.625	mm

ABSOLUTE MAXIMUM RATINGS

PARAMETER	SYMBOL	MIN.	MAX.	UNIT
Supply Voltage Logic	V_{CC}	-0.3	7.0	V[1]
Supply Voltage Drive	V_{LCD}	-0.3	20.0	V
Input Voltage 1	V_{T1}	-0.3	V_{CC} +0.3	V[1,2]
Input Voltage 2	V_{T2}	-0.3	V_{LCD} +0.3	V[1,3]
Operating Temperature	See page 8			
Storage Temperature				

Notes: 1. Measured Reltive to GND; 2. Applies to $\overline{\text{Pins}}$ M/S; OSC, OSC_1, OSC_2, DB_7 to DB_0, /RD, /WR, /CS, RS, /RES, CL_1, M, FLM; 3. Apllies to Pins V_{10}, V_{20}, V_{30}, V_{40} and V_{50}; 4. If the LSI is used beyond its absolute max.rating, it may be permanently damaged. It should always be used within the limits of its electrical characteristics to prevent malfunction or unreliability.

PIN CONFIGURATION

PIN	SYMBOL	SIGNAL DESCRIPTION
1	V_{LED+}	LED Power
2	V_{LED-}	LED Power
3	NC	No Connection
4	RESET	Reset the LSI Internally When Drive Low
5	/RD	Inputs Read Strobe
6	/WR	Inputs Write Strobe
7	/CS	Select the LSI, Specifically Internal Registers (Index and Data Registers) when Drive Low
8	A_0	Select One of the Internal Registers
9-16	D_0 - D_7	Data Bus Line
17	V_{DD}	Power Supply Voltage
18	V_{DC+}	Power Supply fo DC-DC
19	GND	Ground
20	NC	No Connection

ELECTRICAL CHARACTERISTICS, Ta = 25°C

ITEM		SYMBOL	CONDITION	SPEC. VALUE			UNIT
				MIN.	TYP.	MAX.	
Supply Voltage (Logic)		V_{DD} - V_{SS}			3.0±10%		V
LCD Operating Voltage		V_0 - V_{SS}	Ta=+25°C	15.2	15.4	15.6	V
Response Time		T_{ON} T_{OFF}			72 315		ms
Contrast		CR		2.0			
Viewing Angle	12H	θ1	CR ≥ 2.0		45		Deg.
	6H	θ2			65		
	3H	θ3			55		
	9H	θ4			55		

Note (2): Value is high reliability type. Note (3): Electro-Optical Characteristics: See page 5.

BLOCK DIAGRAM

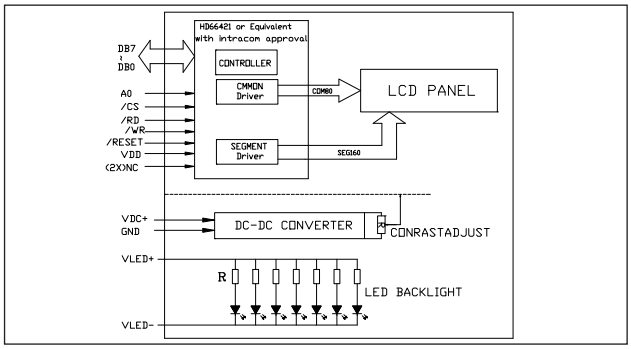

BACKLIGHTING CHARACTERISTICS, Ta = 25°C, LED

ITEM	SYMBOL	CONDITION	SPEC. VALUE			UNIT
			MIN.	TYP.	MAX.	
Forward Voltage	V_f	I_F=70mA	3.0	3.2	3.5	V
Forward Current	I_F	V_f=2.1V	20	70	120	mA
Power Dissipation	P_d	I_F=70mA		0.21		W
Reverse Voltage	V_r				5.0	V
Reverse Current	I_r	Vr=5.0V each chip			10	uA
Luminous Intensity	L_V	I_F=70mA		TBD		cd/m²
Luminous Uniformity	ΔL_V		65			%
Emission Wave Length	λp	I_F=20mA each chip	569		575	nm

Note (4): Operating Temperature Range T_{opr} -20°C to +70°C; Storage Temperature Range T_{stg} -30°C to +80°C.

digital electronic gmbh • Tel. +49 (0) 8221/708-0 Fax. +49 (0) 8221/708-80

All specifications subject to change without notice.

STANDARD GRAPHIC MODULES

YMC 16080-05

160 CHAR x 80 DOTS, 1/80 DUTY, 1/10 BIAS

INTERFACE TIMING CHARACTERISTICS

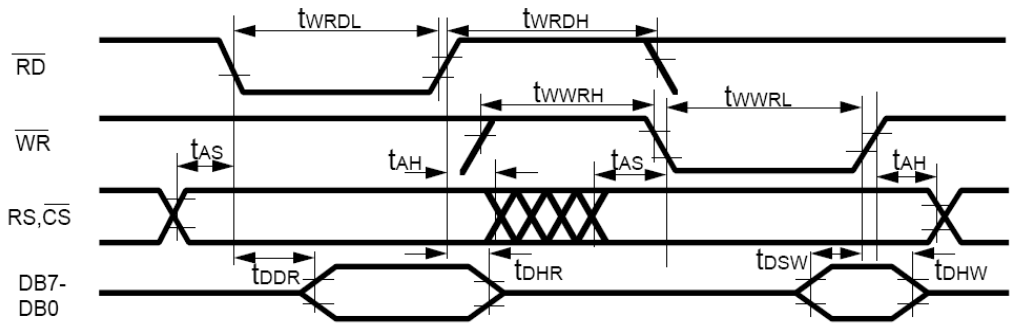

Figure 1 MPU Interface

Notes. The following load circuit is connected for specification.
VOH and VOL of the timing specification is 1/2 VCC level.

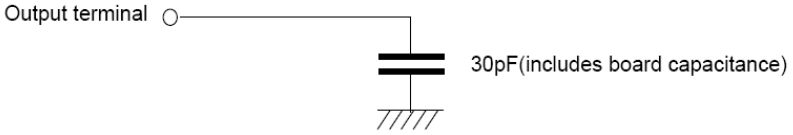

HITACHI

CLOCK CHARACTERISTICS

PARAMETER	SYMBOL	MIN.	TYP.	MAX.	UNIT	NOTES
Oscillation Frequency	f_{OSC}	160	220	280	kHz	R_f=180kΩ, V_{CC}=3.0V
External Clock Frequency	f_{CP}	50		400	kHz	
External Clock Duty Cycle	DUTY	45	50	55	%	
External Clock Fall Time	t_r			0.2	µs	
External Clock Rise Time	t_f			0.2	µs	

MPU INTERFACE

PARAMETER	SYMBOL	MIN.	TYP.	MAX.	UNIT	NOTES
RD Low Level Width	t_{WRDL}	250 190		$4t_{OSC}$ -450	ns	V_{CC}=2.2V to 3.0V, [2] V_{CC}=3.0V to 5.5V, [2]
RD High Level Width	t_{WRDH}	450			ns	
WR Low Level Width	t_{WWRL}	250 190		$4t_{OSC}$ -450	ns	V_{CC}=2.2V to 3.0V, [2] V_{CC}=3.0V to 5.5V, [2]
WR High Level Width	t_{WWRH}	450			ns	
Address Setup Time	t_{AS}	20			ns	
Address Hold TIme	t_{AH}	20			ns	
Data Delay Time	t_{DDR}			180 150	ns	V_{CC}=2.2V to 3.0V V_{CC}=3.0V to 5.5V
Data Output Hold TIme	t_{DHR}	20			ns	
Data Setup Time	t_{DSW}	150 100			ns	V_{CC}=2.2V to 3.0V V_{CC}=3.0V to 5.5V
Data Hold Time	t_{DHW}	10			ns	
RES Low Level Width	t_{RES}	1			ms	

Note 1: All electrical characteristics are guaranteed at +85°C for die products.

Note 2: $t_{OSC}=1/f_{OSC}$

STANDARD GRAPHIC MODULES

YMC 192192-01

192 X 192 DOTS, 1/192 DUTY, 1/12 BIAS

EXTERNAL DIMENSION AND DISPLAY PATTERN

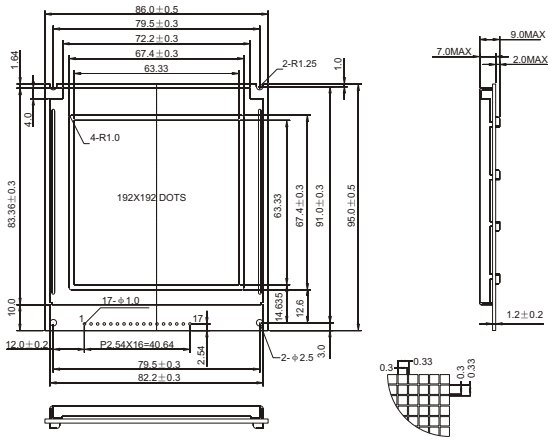

MECHANICAL DATA

ITEM	SPECIFICATION	UNIT
Module Size (W x H x T)	86.0 x 95.0 x 9.0	mm
Viewing Area (W x H)	67.4 x 67.4	mm
Number of Dots	192 x 192	dots
Dot Pitch (W x H)	0.33 x 0.33	mm
Dot Size (W x H)	0.3 x 0.3	mm

ABSOLUTE MAXIMUM RATINGS

PARAMETER	SYMBOL	MIN.	MAX.	UNIT
Supply Voltage Logic	V_{DD} - V_{SS}	-0.3	7.0	V
Supply Voltage Drive	V_{DD} - V_{EE}	-0.3	30.0	V
Input Voltage	V_{IN}	-0.3	V_{DD} +0.3	V
Operating Temperature	See page 8			
Storage Temperature				

PIN CONFIGURATION

PIN	SYMBOL	SIGNAL DESCRIPTION
1	V_{DD}	Logic Supply Voltage (+5.0V)
2	FG	Frame Ground
3	CL2	Data Shift Clock
4	INH	Display ON/OFF Control Terminal
5	FLM	Frame Signal
6	CL1	Data Latch Signal
7	V_{SS}	GND
8	M	LCD Drive Signal (AC Signal)
9-12	DB_0-DB_3	Data Bus Line
13	V_{LC}	Operating Voltage for LCD
14	V_0	LCD Drive Output Voltage Level
15	V_{SS}	GND
16	LEDA	Power Supply Terminal for Driving LED Backlight
17	LEDC	GND Terminal for Driving LED Backlight

BLOCK DIAGRAM

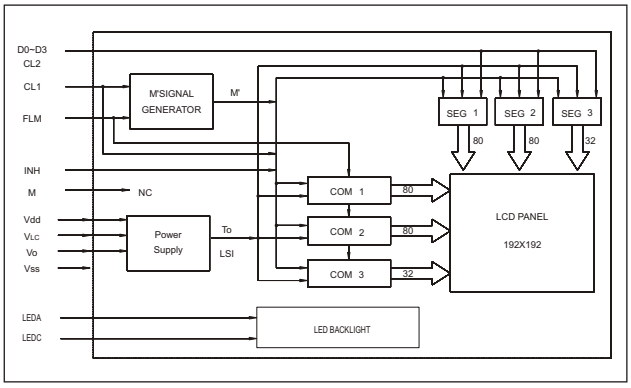

BACKLIGHTING CHARACTERISTICS, Ta=25°C, LED

ITEM	SYMBOL	CONDITION	SPEC. VALUE			UNIT
			MIN.	TYP.	MAX.	
Supply Voltage	V_F	I_F=150mA	3.9	4.1	4.3	V
Power Consumption	P_{LED}			615		mW

ELECTRICAL CHARACTERISTICS, Ta=25°C

ITEM		SYMBOL	CONDITION	SPEC. VALUE			UNIT
				MIN.	TYP.	MAX.	
Supply Voltage (Logic)		V_{DD} - V_{SS}		2.7	5.0	5.5	V
Supply Current (Logic)		I_{DD}	V_{DD} =5V		0.8		mA
Input Voltage	HIGH	V_{IH}		0.8 V_{DD}		V_{DD}	V
	LOW	V_{IL}				0.2 V_{DD}	V
Output Voltage	HIGH	V_{OH}		V_{DD} -0.4			V
	LOW	V_{OL}				0.4	V
LCD Operating Voltage		V_{DD} - V_{EE}	V_{DD} =5V Ta=+25°C	6.0	24.0	28.0	V
Supply Current LCD Drive		I_{EE}			0.5		mA

Note (1): Value is high reliability type. Note (2): Electro-Optical Characteristics: See page 5.

digital electronic gmbh • Tel. +49 (0) 8221/708-0 Fax. +49 (0) 8221/708-80

All specifications subject to change without notice.

STANDARD GRAPHIC MODULES

YMC 192192-01

192 X 192 DOTS, 1/192 DUTY, 1/12 BIAS

SEGMENT DRIVER APPLICATION TIMING

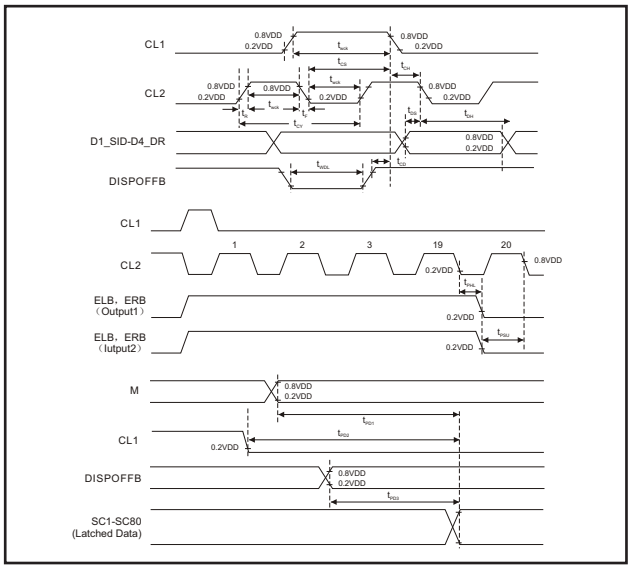

COMMON DRIVER APPLICATION TIMING

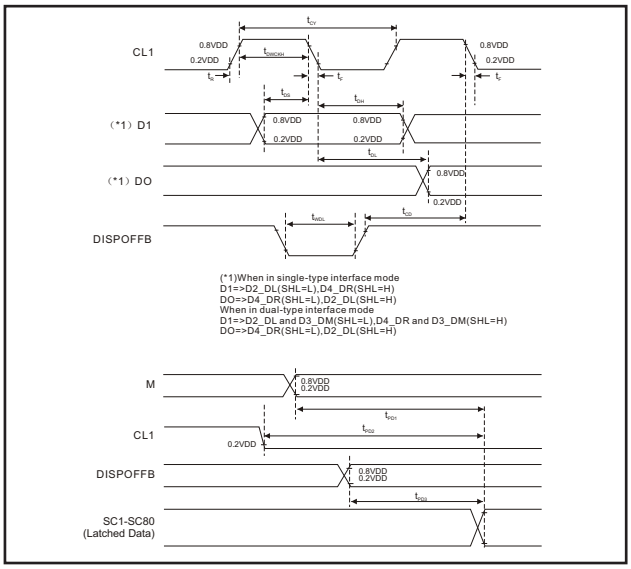

AC CHARACTERISTICS: SEGMENT DRIVER APPLICATION, V_{SS}= 0V , Ta=-30°C to +85°C

CHARACTERISTIC	SYMBOL	TEST CONDITION	V_{DD}= 5V ±10% (1)			V_{DD}= 3V ±10% (2)			UNIT
			MIN.	TYP.	MAX.	MIN.	TYP.	MAX.	
Clock Cycle Time	t_{CY}	Duty=50%	125			250			ns
Clock Pulse Width	t_{WCK}		45			95			ns
Clock Rise / Fall Time	t_R/t_F							30	ns
Data Setup Time	t_{DS}		30			65			ns
Data Hold Time	t_{DH}		30			65			ns
Clock Setup Time	t_{CS}		80			120			ns
Clock Hold Time	t_{CH}		80			120			ns
Propagation Delay Time	t_{PHL}	ELB Output			60			125	ns
		ERB Output			60			125	ns
ELB ERB Setup Time	t_{PSU}	ELB Input	30			65			ns
		ERB Input	30			65			ns
DISPOFFB Low Pulse Width	t_{WDL}		1.2			1.2			μ s
DISPOFFB Clear Time	t_{CD}		100			100			ns
M-OUT Propagation Delay Time	t_{PD1}	C_L=15pF			1.0			1.2	μ s
CLI-OUT Propagation Delay Time	t_{PD2}				1.0			1.2	μ s
DISPOFFB-OUT Propagation Delay Time	t_{PD3}				1.0				μ s

AC CHARACTERISTICS: COMMON DRIVER APPLICATION, V_{SS}= 0V , Ta=-30°C to +85°C

CHARACTERISTIC	SYMBOL	TEST CONDITION	V_{DD}= 5V ±10% (1)			V_{DD}= 3V ±10% (2)			UNIT
			MIN.	TYP.	MAX.	MIN.	TYP.	MAX.	
Clock Cycle Time	t_{CY}	Duty=50%	250			500			ns
Clock Pulse Width	t_{WCK}		45			95			ns
Clock Rise / Fall Time	t_R/t_F				50			50	ns
Data Setup Time	t_{DS}		30			65			ns
Data Hold Time	t_{DH}		30			65			ns
DISPOFFB Low Pulse Width	t_{WDL}		1.2			1.2			μ s
DISPOFFB Clear Time	t_{CD}		100			100			ns
Output Delay Time	t_{DL}	C_L=15pF			200			250	ns
M-OUT Propagation Delay Time	t_{PD1}				1.0			1.2	μ s
CLI-OUT Propagation Delay Time	t_{PD2}				1.0			1.2	μ s
DISPOFFB-OUT Propagation Delay Time	t_{PD3}				1.0			1.2	μ s

STANDARD GRAPHIC MODULES

YMS 24064-02

240 X 64 DOTS, 1/64 DUTY, 1/9 BIAS

EXTERNAL DIMENSION AND DISPLAY PATTERN

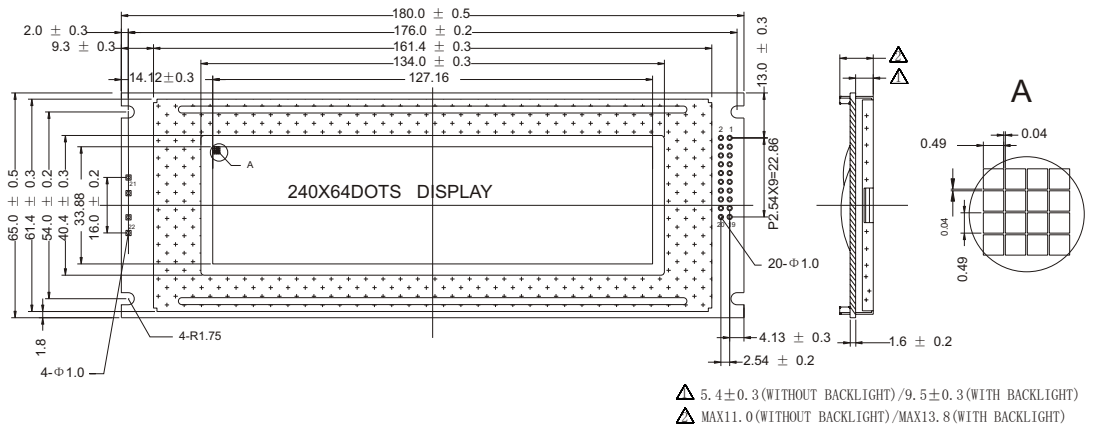

MECHANICAL DATA

ITEM	SPECIFICATION	UNIT
Module Size (W x H x T)	180.0 x 65.0 x 11.0/13.8	mm
Viewing Area (W x H)	134.0 x 40.4	mm
Number of Dots	240 x 64	dots
Dot Pitch (W x H)	0.53 x 0.53	mm
Dot Size (W x H)	0.49 x 0.49	mm

ABSOLUTE MAXIMUM RATINGS

PARAMETER	SYMBOL	MIN.	MAX.	UNIT
Supply Voltage Logic	V_{DD} (V_{DD} - V_{SS})	-0.3	7.0	V
Supply Voltage Drive	V_{DD} - V_{EE}	-0.3	30.0	V
Input Voltage	V_{IN}	-0.3	V_{DD} +0.3	V
Operating Temperature	See page 8			
Storage Temperature				

PIN CONFIGURATION

PIN	SYMBOL	LEVEL	SIGNAL DESCRIPTION
1	FG	0V	Frame Ground
2	V_{SS}	0V	GND (0 V)
3	V_{DD}	+5V	Supply Voltage for Logic and LCD
4	V_0		Operating Voltage for LCD (variable)
5	/WR	L	Write Signal
6	/RD	L	Read Signal
7	/CE	L	Chip Enable Signal
8	C/D	H/L	H: Instruction Code, L: DATA Code
9	V_{EE}		Supply Voltage LCD Driver
10	/RES	H, H-L	Reset Signal
11	DB_0	H/L	Data Bit 0
12	DB_1	H/L	Data Bit 1
13	DB_2	H/L	Data Bit 2
14	DB_3	H/L	Data Bit 3
15	DB_4	H/L	Data Bit 4
16	DB_5	H/L	Data Bit 5
17	DB_6	H/L	Data Bit 6
18	DB_7	H/L	Data Bit 7
19	FS	H/L	Font Select Signal (H: 6x8 dots, L: 8x8 dots)
20	NC		No Connection
21	A	Anode of LED Unit	
22	K	Cathode of LED Unit	

BLOCK DIAGRAM

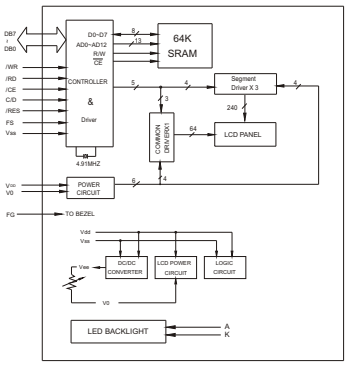

digital electronic gmbh • Tel. +49 (0) 8221/708-0 Fax. +49 (0) 8221/708-80

All specifications subject to change without notice.

STANDARD GRAPHIC MODULES

YMS 24064-02

240 X 64 DOTS, 1/64 DUTY, 1/9 BIAS

ELECTRICAL CHARACTERISTICS, Ta = 25°C

ITEM		SYMBOL	CONDITION	SPEC. VALUE			UNIT
				MIN.	TYP.	MAX.	
Supply Voltage (Logic)		V_{DD} - V_{SS}		4.5	5.0	5.5	V
Supply Current (Logic)		I_{DD}	V_{DD} =5V		8.7	13.0	mA
Input Voltage	HIGH	V_{IH}		V_{DD} -2.2		V_{DD}	V
	LOW	V_{IL}		0		0.8	V
Output Voltage	HIGH	V_{OH}	I_{OH}=3.0mA	V_{DD} -0.3		V_{DD}	V
	LOW	V_{OL}	I_{OL} =3.0mA	0		0.3	V
LCD Operating Voltage		V_{DD} - V_0	V_{DD} =5V Ta=+25°C		11.0		V
Supply Current LCD Drive		I_0			2.0	3.0	mA

Note (1): Value is high reliability type. Note (2): Electro-Optical Characteristics: See page 5.

BACKLIGHTING CHARACTERISTICS, Ta = 25°C, LED

ITEM	SYMBOL	CONDITION	SPEC. VALUE			UNIT
			MIN.	TYP.	MAX.	
Supply Voltage	V_{LED}		7.9	8.2	8.5	V
Power Consumption	P_{LED}	I_F=400mA		3280		mW
Luminous	I_V	I_F=400mA				cd/m^2

INTERFACE TIMING CHARACTERISTICS

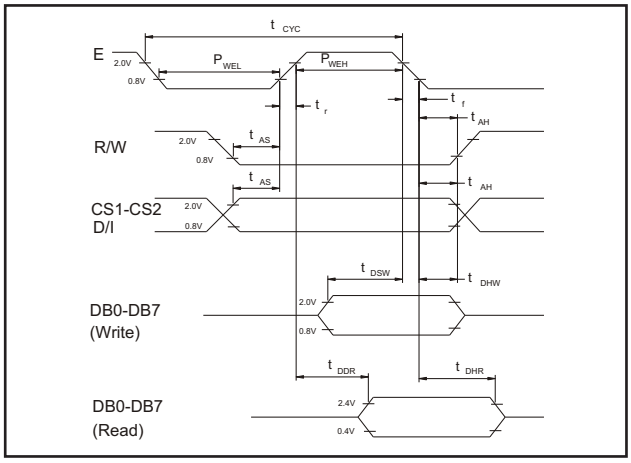

PARAMETER	SYMBOL	MIN.	MAX.	UNIT
C/D Setup Time	t_{CDS}	100		ns
C/D Hold Time	t_{CDH}	10		ns
/CE,/RD,/WR Pulse Width	t_{CE} t_{RD} t_{WR}	80		ns
Data Setup Time	t_{DS}	80		ns
Data Hold Time	t_{DH}	40		
Access Time	t_{ACC}		150	ns
Output Hold Time	t_{OH}	10	50	ns

Condition: V_{DD}=+5.0V ±10%, V_{SS}=0V, Ta=+25°C

STANDARD GRAPHIC MODULES

YMS 240128-01

240 X 128 DOTS, 1/128 DUTY, 1/12 BIAS

EXTERNAL DIMENSION AND DISPLAY PATTERN

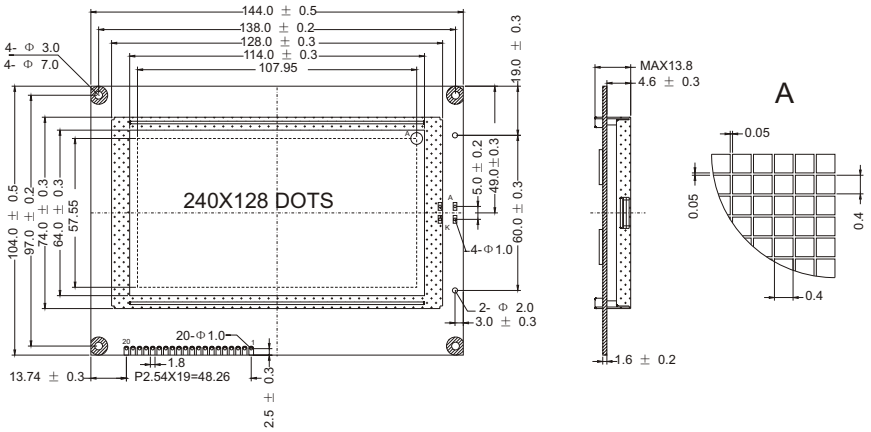

MECHANICAL DATA

ITEM	SPECIFICATION	UNIT
Module Size (W x H x T)	144.0 x 104.0 x 13.8	mm
Viewing Area (W x H)	114.0 x 64.0	mm
Number of Dots	240 x 128	dots
Dot Pitch (W x H)	0.45 x 0.45	mm
Dot Size (W x H)	0.40 x 0.40	mm

ABSOLUTE MAXIMUM RATINGS

PARAMETER	SYMBOL	MIN.	MAX.	UNIT
Supply Voltage Logic	V_{DD} (V_{DD} - V_{SS})	-0.3	7.0	V
Supply Voltage Drive	V_{DD} - V_{EE}	-0.3	30.0	V
Input Voltage	V_{IN}	-0.3	V_{DD} +0.3	V
Operating Temperature	See page 8			
Storage Temperature				

PIN CONFIGURATION

PIN	SYMBOL	LEVEL	SIGNAL DESCRIPTION
1	V_{SS}	0V	GND (0V)
2	V_{DD}	+5V	Supply Voltage for Logic and LCD
3	V_0		Operating Voltage for LCD (variable)
4	C/D	H/L	H: Instruction Code, L: DATA Code
5	/RD	L	Read Signal
6	/WR	L	Write Signal
7	DB_0	H/L	Data Bit 0
8	DB_1	H/L	Data Bit 1
9	DB_2	H/L	Data Bit 2
10	DB_3	H/L	Data Bit 3
11	DB_4	H/L	Data Bit 4
12	DB_5	H/L	Data Bit 5
13	DB_6	H/L	Data Bit 6
14	DB_7	H/L	Data Bit 7
15	/CE	L	Chip Enable Signal
16	/RES	H, H-L	Reset Signal
17	V_{EE}		Supply Voltage LCD Driver
18	MD2	H/L	Number of Columns Select Signal
19	FS1	H/L	Font Select Signal (H: 6x8 dots, L: 8x8 dots)
20	NC		No Connection
21	A	Anode of LED Unit	
22	K	Cathode if LED Unit	

BLOCK DIAGRAM

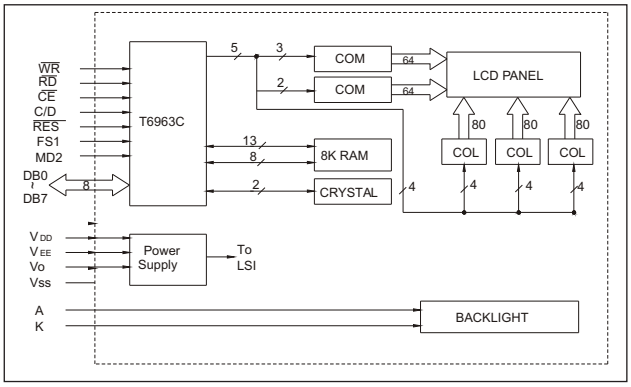

digital electronic gmbh • Tel. +49 (0) 8221/708-0 Fax. +49 (0) 8221/708-80

All specifications subject to change without notice.

STANDARD GRAPHIC MODULES

YMS 240128-01

240 X 128 DOTS, 1/128 DUTY, 1/12 BIAS

ELECTRICAL CHARACTERISTICS, Ta = 25°C

ITEM		SYMBOL	CONDITION	SPEC. VALUE			UNIT
				MIN.	TYP.	MAX.	
Supply Voltage (Logic)		V_{DD} - V_{SS}		4.5	5.0	5.5	V
Supply Current (Logic)		I_{DD}	V_{DD} =5V		8.7	13.0	mA
Input Voltage	HIGH	V_{IH}		V_{DD} -2.2		V_{DD}	V
	LOW	V_{IL}		0		0.8	V
Output Voltage	HIGH	V_{OH}	I_{OH}=3.0mA	V_{DD} -0.3		V_{DD}	V
	LOW	V_{OL}	I_{OL} =3.0mA	0		0.3	V
LCD Operating Voltage		V_{DD} - V_0	V_{DD} =5V Ta=+25°C		16.6		V
Supply Current LCD Drive		I_0			5.47		mA

Note (1): Value is high reliability type. Note (2): Electro-Optical Characteristics: See page 5.

BACKLIGHTING CHARACTERISTICS, Ta = 25°C, LED

ITEM	SYMBOL	CONDITION	SPEC. VALUE			UNIT
			MIN.	TYP.	MAX.	
Supply Voltage	V_{LED}		3.6	4.1	4.5	V
Power Consumption	P_{LED}	I_F=720mA		2950		mW
Luminous	I_V	I_F=720mA	133	190		cd/m^2

INTERFACE TIMING CHARACTERISTICS

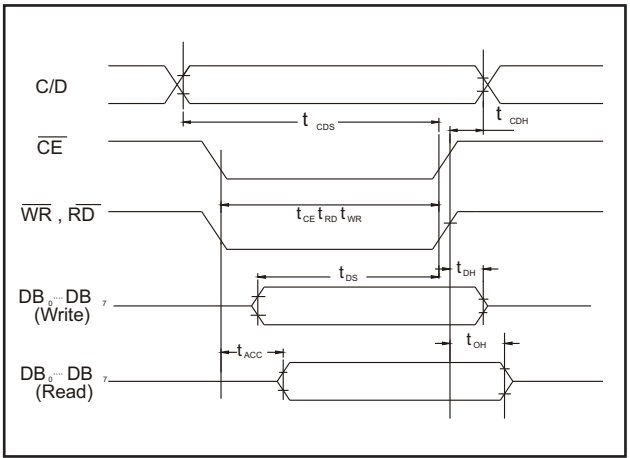

PARAMETER	SYMBOL	MIN.	MAX.	UNIT
C/D Setup Time	t_{CDS}	100		ns
C/D Hold Time	t_{CDH}	10		ns
/CE,/RD,/WR Pulse Width	t_{CE} t_{RD} t_{WR}	80		ns
Data Setup Time	t_{DS}	80		ns
Data Hold Time	t_{DH}	40		
Access Time	t_{ACC}		150	ns
Output Hold Time	t_{OH}	10	50	ns

Condition: V_{DD}=+5.0V ±10%, V_{SS}=0V, Ta=+25°C

STANDARD GRAPHIC MODULES

YMS 240128-02

240 X 128 DOTS, 1/128 DUTY, 1/13 BIAS

EXTERNAL DIMENSION AND DISPLAY PATTERN

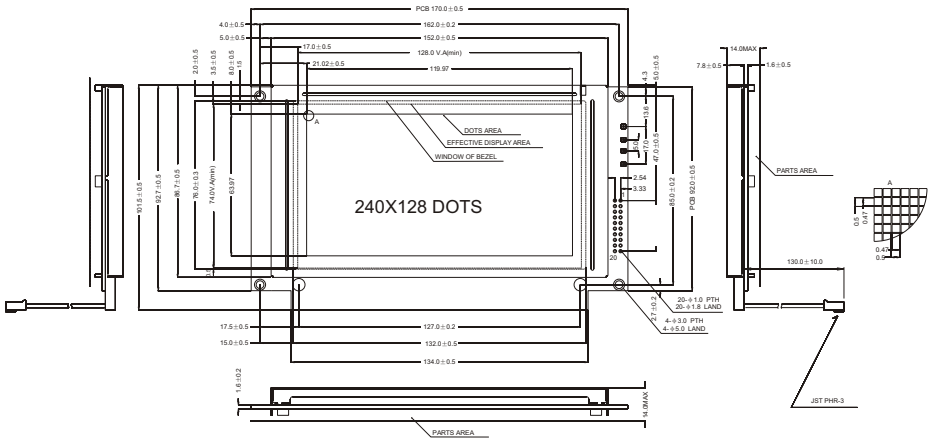

MECHANICAL DATA

ITEM	SPECIFICATION	UNIT
Module Size (W x H x T)	170.0 x 101.5 x 14.0	mm
Viewing Area (W x H)	128.0 x 74.0	mm
Number of Dots	240 x 128	dots
Dot Pitch (W x H)	0.50 x 0.50	mm
Dot Size (W x H)	0.47 x 0.47	mm

ABSOLUTE MAXIMUM RATINGS

PARAMETER	SYMBOL	MIN.	MAX.	UNIT
Supply Voltage Logic	V_{DD} - V_{SS}	-0.3	7.0	V
Supply Voltage Drive	V_{DD} - V_{EE}	-0.3	30.0	V
Input Voltage	V_{IN}	-0.3	V_{DD} +0.3	V
Operating Temperature	See page 8			
Storage Temperature				

PIN CONFIGURATION

PIN	SYMBOL	SIGNAL DESCRIPTION
1	FGND	Frame Ground
2	V_{SS}	GND (0 V)
3	V_{DD}	Supply Voltage for Logic
4	V_L	Contrast Adjust for LCD Driving
5	/WR	Write Signal
6	/RD	Read Signal
7	/CE	Chip Enable Signal
8	C/D	H: Instruction Code, L: DATA Code
9	NC	No Connection
10	/RES	Reset Signal
11-18	DB_0-DB_7	Data Input / Output
19	FS1	Pins for Font Selection
20	RV	Display Data Reverse R_V=H: Reverse Display R_V=L: Nomal Display

BLOCK DIAGRAM

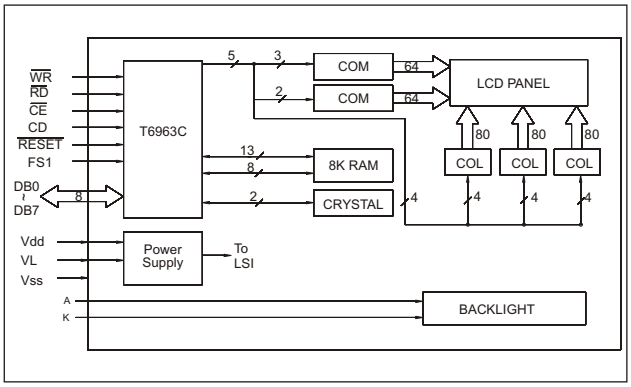

BACKLIGHTING CHARACTERISTICS, Ta=25°C, LED

ITEM	SYMBOL	CONDITION	SPEC. VALUE			UNIT
			MIN.	TYP.	MAX.	
Supply Voltage	IF	V_F=3.2mA		240	250	V
Power Consumption	P_{LED}	V_F=3.2mA		768	800	mW
Luminous				TBD		cd/m²

ELECTRICAL CHARACTERISTICS, Ta=25°C

ITEM		SYMBOL	CONDITION	SPEC. VALUE			UNIT
				MIN.	TYP.	MAX.	
Supply Voltage (Logic)		V_{DD} - V_{SS}		4.5	5.0	5.5	V
Supply Current (Logic)		I_{DD}	V_{DD} =5V	3.3		6.0	mA
Input Voltage	HIGH	V_{IH}		V_{DD} -2.2		V_{DD}	V
	LOW	V_{IL}		0		0.8	V
Output Voltage	HIGH	V_{OH}		V_{DD} -0.3		V_{DD}	V
	LOW	V_{OL}		0		0.3	V
LCD Operating Voltage		V_{DD} - V_{EE}	V_{DD} =5V Ta=+25°C		17.8		V
Supply Current LCD Drive		I_{EE}		1.8		3.4	mA

Note (1): Value is high reliability type. Note (2): Electro-Optical Characteristics: See page 5.

digital electronic gmbh • Tel. +49 (0) 8221/708-0 Fax. +49 (0) 8221/708-80

All specifications subject to change without notice.

STANDARD GRAPHIC MODULES

YMS 240128-02

240 X 128 DOTS, 1/128 DUTY, 1/13 BIAS

INTERFACE TIMING CHARACTERISTICS

Switching Characteristics 1

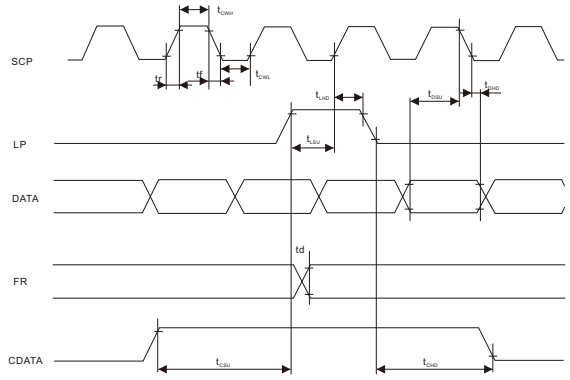

Test Conditions: Unless otherwise noted, V_{DD}= 5.0V±10%, V_{SS}=0V, Ta=-20°C to +70°C					
PARAMETER	SYMBOL	TEST CONDITIONS	MIN.	MAX.	UNIT
Operating Frequency	f_{SCP}	Ta=-10°C to +70°C		2.75	ns
SCP Pulse Width	t_{CWH}, t_{CWL}		150		ns
SCP Rise/Fall Time	t_R, t_F			30	ns
LP Setup Time	t_{LSU}		150	290	ns
LP Hold Time	t_{LHD}		5	40	ns
Data Setup Time	t_{DSU}		170		ns
Data Hold Time	t_{DHD}		80		ns
FR Delay Time	td		0	90	ns
CDATA Setup Time	t_{CSU}		450	850	ns
CDATA Hold Time	t_{CHD}		450	950	ns

Switching Characteristics 2

Bus Timing

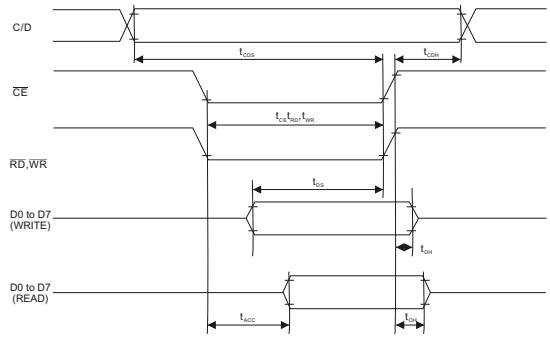

Test Conditions: Unless otherwise noted, V_{DD}= 5.0V±10%, V_{SS}=0V, Ta=-20°C to +75°C					
PARAMETER	SYMBOL	TEST CONDITIONS	MIN.	MAX.	UNIT
C/D Setup Time	f_{CDS}		100		ns
C/D Hold Time	t_{CDH}		10		ns
/CE,/RD,/WR Pulse Width	t_{CE}, t_{RD}, t_{WR}		80		ns
Data Setup Time	t_{DS}		80		ns
Data Hold Time	t_{DH}		40		ns
Access Time	t_{ACC}			150	ns
Output Hold Time	t_{OH}		10	50	ns

Switching Characteristics 3

(1) External RAM Read mode

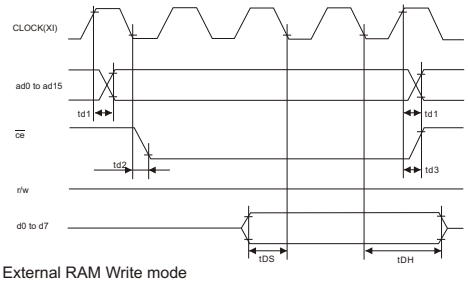

(2) External RAM Write mode

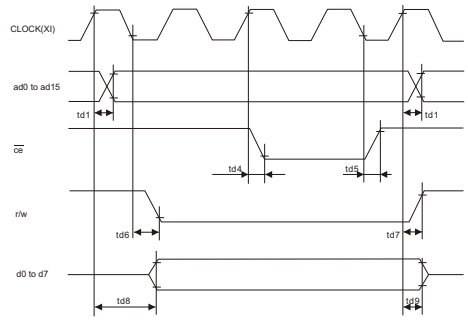

Test Conditions: Unless otherwise noted, V_{DD}= 5.0V±10%, V_{SS}=0V, Ta=-20°C to +70°C					
PARAMETER	SYMBOL	TEST CONDITIONS	MIN.	MAX.	UNIT
Address Delay Time	t_{d1}			250	ns
CE Fall Delay Time (Read)	t_{d2}			180	ns
CE Rise Delay Time (Read)	t_{d3}			180	ns
Data Setup Time	t_{DS}		0		ns
Data Hold Time	t_{DH}		30		ns
CE Fall Delay Time (Write)	t_{d4}			200	ns
CE Rise Delay Time (Write)	t_{d5}			200	ns
R/W Fall Delay Time	t_{d6}			180	ns
R/W Rise Delay Time	t_{d7}			180	ns
Data Stable Time	t_{d8}			450	ns
Data Hold Time	t_{d9}			200	

STANDARD GRAPHIC MODULES

YMS 320240-02

320 X 240 DOTS, 1/240 DUTY, 1/13 BIAS

EXTERNAL DIMENSION AND DISPLAY PATTERN

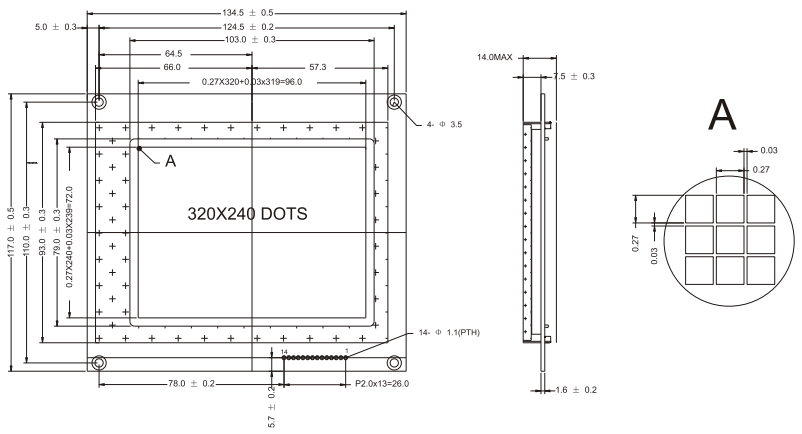

MECHANICAL DATA

ITEM	SPECIFICATION	UNIT
Module Size (W x H x T)	134.5 x 117.0 x 14.0	mm
Viewing Area (W x H)	103.0 x 79.0	mm
Number of Dots	320 x 240	dots
Dot Pitch (W x H)	0.3 x 0.3	mm
Dot Size (W x H)	0.27 x 0.27	mm

ABSOLUTE MAXIMUM RATINGS

PARAMETER	SYMBOL	MIN.	MAX.	UNIT
Supply Voltage Logic	V_{DD} (V_{DD} - V_{SS})	-0.3	7.0	V
Supply Voltage Drive	V_{DD} - V_{EE}	-0.3	30.0	V
Input Voltage	V_{IN}	-0.3	V_{DD} +0.3	V
Operating Temperature	See page 8			
Storage Temperature				

PIN CONFIGURATION

PIN	SYMBOL	LEVEL	SIGNAL DESCRIPTION
1	V_L		Operating Voltage for LCD (variable)
2	V_{EE}		Supply Voltage for Logic and LCD
3	DB_3	H/L	Data Bit 3
4	DB_2	H/L	Data Bit 2
5	DB_1	H/L	Data Bit 1
6	DB_0	H/L	Data Bit 0
7	V_{SS}	0V	Ground
8	V_{DD}	+5V	Power Supply
9	CL_2	H, H-L	Display Data Shift Clock
10	CL_1	H, H-L	Display Data Latch Clock
11	FLM	H	First Line Marker
12	K	Cathode of LED Unit	
13	A	Anode of LED Unit	
14	NC	No Connection	

BLOCK DIAGRAM

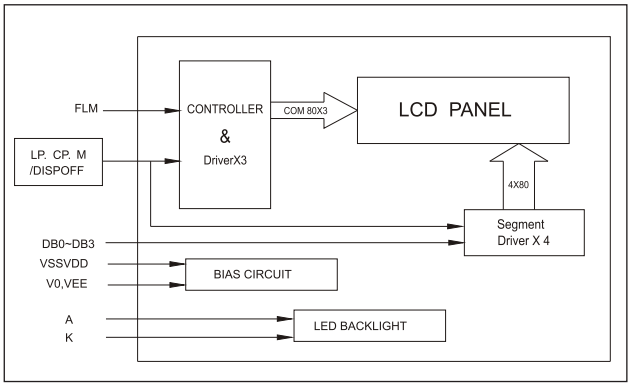

digital electronic gmbh • Tel. +49 (0) 8221/708-0 Fax. +49 (0) 8221/708-80

All specifications subject to change without notice.

STANDARD GRAPHIC MODULES

YMS 320240-02

320 X 240 DOTS, 1/240 DUTY, 1/13 BIAS

ELECTRICAL CHARACTERISTICS, Ta = 25°C

ITEM		SYMBOL	CONDITION	SPEC. VALUE			UNIT
				MIN.	TYP.	MAX.	
Supply Voltage (Logic)		V_{DD} - V_{SS}		4.5	5.0	5.5	V
Supply Current (Logic)		I_{DD}	V_{DD} =5V		8.7	13.0	mA
Input Voltage	HIGH	V_{IH}		V_{DD} -2.2		V_{DD}	V
	LOW	V_{IL}		0		0.8	V
Output Voltage	HIGH	V_{OH}	I_{OH}=3.0mA	V_{DD} -0.3		V_{DD}	V
	LOW	V_{OL}	I_{OL} =3.0mA	0		0.3	V
LCD Operating Voltage		V_{DD} - V_0	V_{DD} =5V Ta=+25°C		22.9		V
Supply Current LCD Drive		I_0			4.5		mA

Note (1): Value is high reliability type. Note (2): Electro-Optical Characteristics: See page 5.

SWITCHING TIMING CHARACTERISTICS

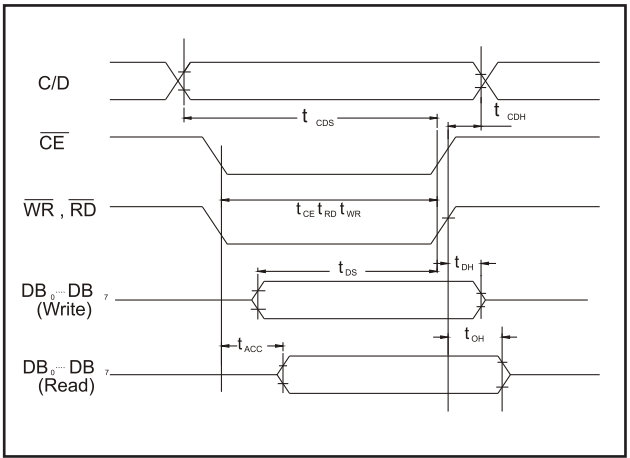

PARAMETER	SYMBOL	MIN.	MAX.	UNIT
C/D Setup Time	t_{CDS}	100		ns
C/D Hold Time	t_{CDH}	10		ns
/CE,/RD,/WR Pulse Width	t_{CE} t_{RD} t_{WR}	80		ns
Data Setup Time	t_{DS}	80		ns
Data Hold Time	t_{DH}	40		ns
Access Time	t_{ACC}		150	ns
Output Hold Time	t_{OH}	10	50	ns

Condition: V_{DD}=+5.0V ±10%, V_{SS}=0V, Ta=+25°C

STANDARD GRAPHIC MODULES

YMS 320240-03

320 X 240 DOTS, 1/240 DUTY, 1/12 BIAS

EXTERNAL DIMENSION AND DISPLAY PATTERN

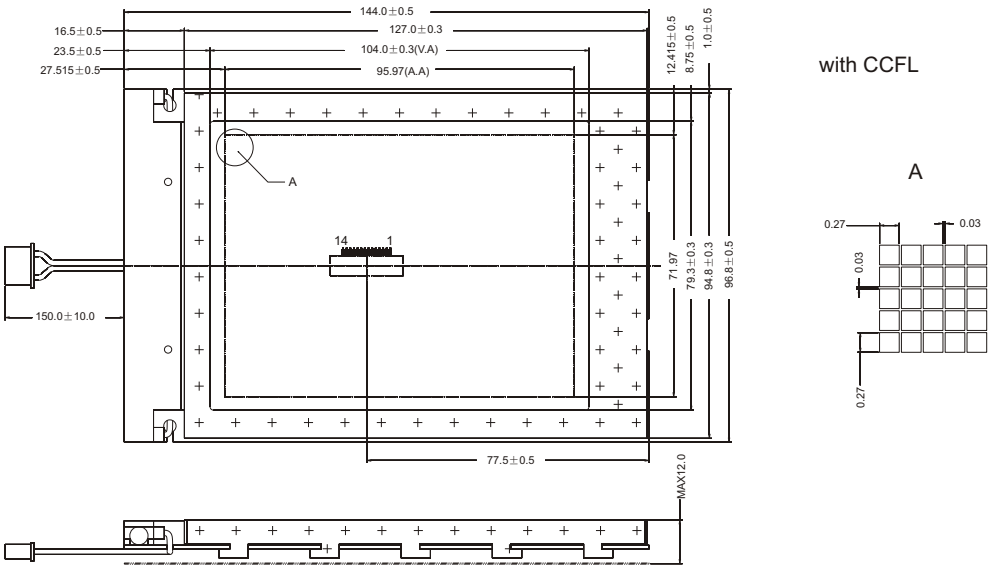

with CCFL

A

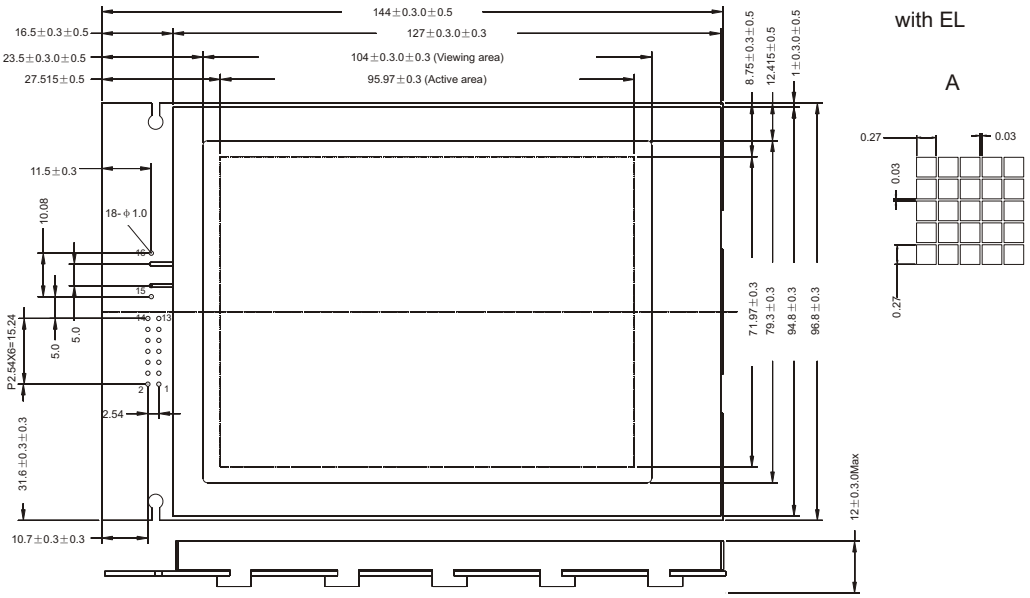

with EL

A

MECHANICAL DATA

ITEM	SPECIFICATION	UNIT
Module Size (W x H x T)	144.0 x 96.8 x 12.0	mm
Viewing Area (W x H)	104.0 x 79.3	mm
Number of Dots	320 x 240	dots
Dot Pitch (W x H)	0.3 x 0.3	mm
Dot Size (W x H)	0.27 x 0.27	mm

ABSOLUTE MAXIMUM RATINGS

PARAMETER	SYMBOL	MIN.	MAX.	UNIT
Supply Voltage Logic	V_{DD} (V_{DD} - V_{SS})	-0.3	7.0	V
Supply Voltage Drive	V_{DD} - V_{EE}	-0.3	30.0	V
Input Voltage	V_{IN}	-0.3	V_{DD} +0.3	V
Operating Temperature	See page 8			
Storage Temperature				

digital electronic gmbh • Tel. +49 (0) 8221/708-0 Fax. +49 (0) 8221/708-80

All specifications subject to change without notice.

STANDARD GRAPHIC MODULES

YMS 320240-03

320 X 240 DOTS, 1/240 DUTY, 1/12 BIAS

PIN CONFIGURATION

PIN	SYMBOL	LEVEL	SIGNAL DESCRIPTION
1	FLM	H	First Line Marker
2	M	H/L	AC Driving Control Signal
3	CL_1	H, H-L	Display Dta Latch Clock
4	CL_2	H, H-L	Display Data Shift Clock
5	/DISPOFF	L	Display Off
6	DB_0	H/L	Data Bit 0
7	DB_1	H/L	Data Bit 1
8	DB_2	H/L	Data Bit 2
9	DB_3	H/L	Data Bit 3
10	V_{DD}	+5V	Power Supply
11	V_{SS}	0V	Ground (0 V)
12	V_{EE}		Supply Voltage for Logic and LCD
13	V_0		Operating Voltage for LCD (variable)
14	FGND		Front Panel Ground

BLOCK DIAGRAM

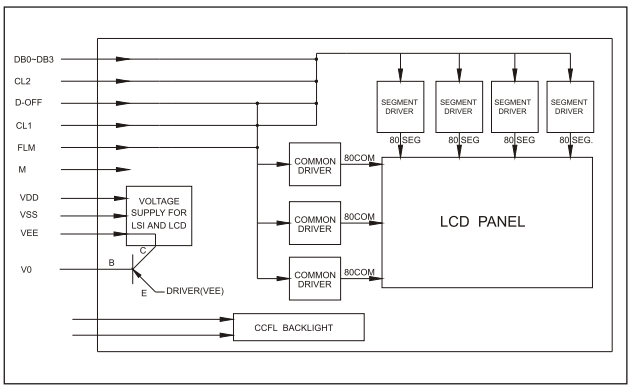

ELECTRICAL CHARACTERISTICS, Ta = 25°C

ITEM		SYMBOL	CONDITION	SPEC. VALUE			UNIT
				MIN.	TYP.	MAX.	
Supply Voltage (Logic)		V_{DD} - V_{SS}		4.5	5.0	5.5	V
Supply Current (Logic)		I_{DD}	V_{DD} =5V		8.7	13.0	mA
Input Voltage	HIGH	V_{IH}		V_{DD} -2.2		V_{DD}	V
	LOW	V_{IL}		0		0.8	V
Output Voltage	HIGH	V_{OH}	I_{OH}=3.0mA	V_{DD} -0.3		V_{DD}	V
	LOW	V_{OL}	I_{OL} =3.0mA	0		0.3	V
LCD Operating Voltage		V_{DD} - V_0	V_{DD} =5V Ta=+25°C		22.0		V
Supply Current LCD Drive		I_0			4.5		mA

Note (1): Value is high reliability type. Note (2): Electro-Optical Characteristics: See page 5.

SWITCHING TIMING CHARACTERISTICS

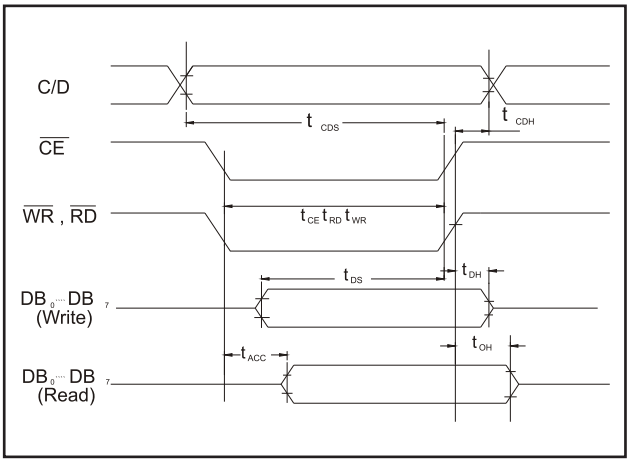

PARAMETER	SYMBOL	MIN.	MAX.	UNIT
C/D Setup Time	t_{CDS}	100		ns
C/D Hold Time	t_{CDH}	10		ns
/CE,/RD,/WR Pulse Width	t_{CE} t_{RD} t_{WR}	80		ns
Data Setup Time	t_{DS}	80		ns
Data Hold Time	t_{DH}	40		ns
Access Time	t_{ACC}		150	ns
Output Hold Time	t_{OH}	10	50	ns

Condition: V_{DD}=+5.0V ±10%, V_{SS}=0V, Ta=+25°C

STANDARD GRAPHIC MODULES

YMS 320240-05

320 X 240 DOTS, 1/240 DUTY, 1/13 BIAS

EXTERNAL DIMENSION AND DISPLAY PATTERN

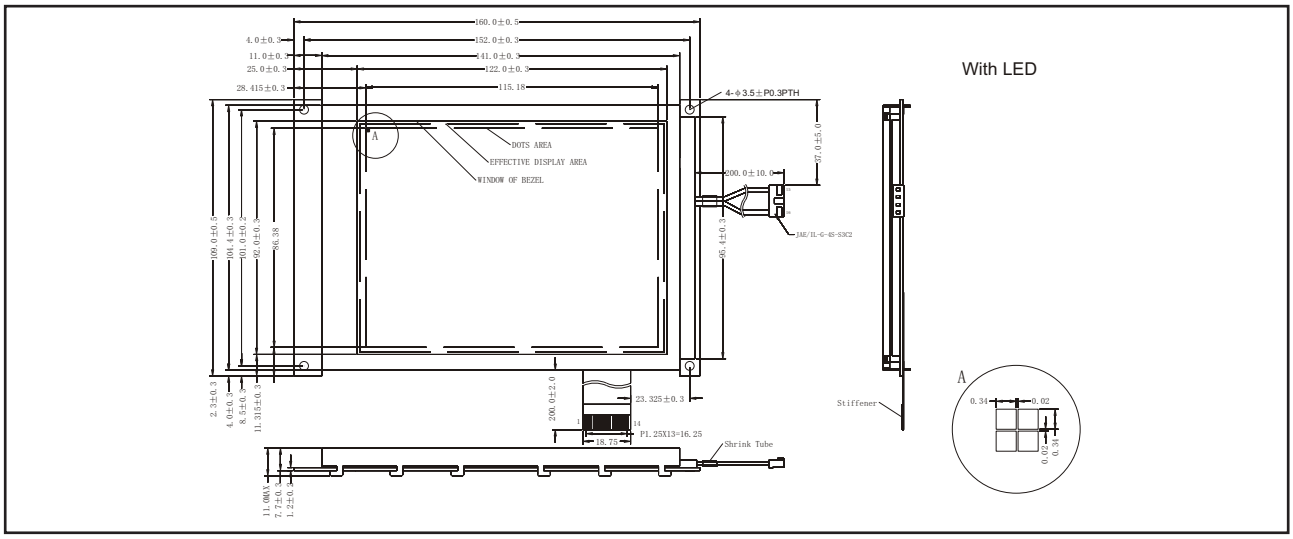

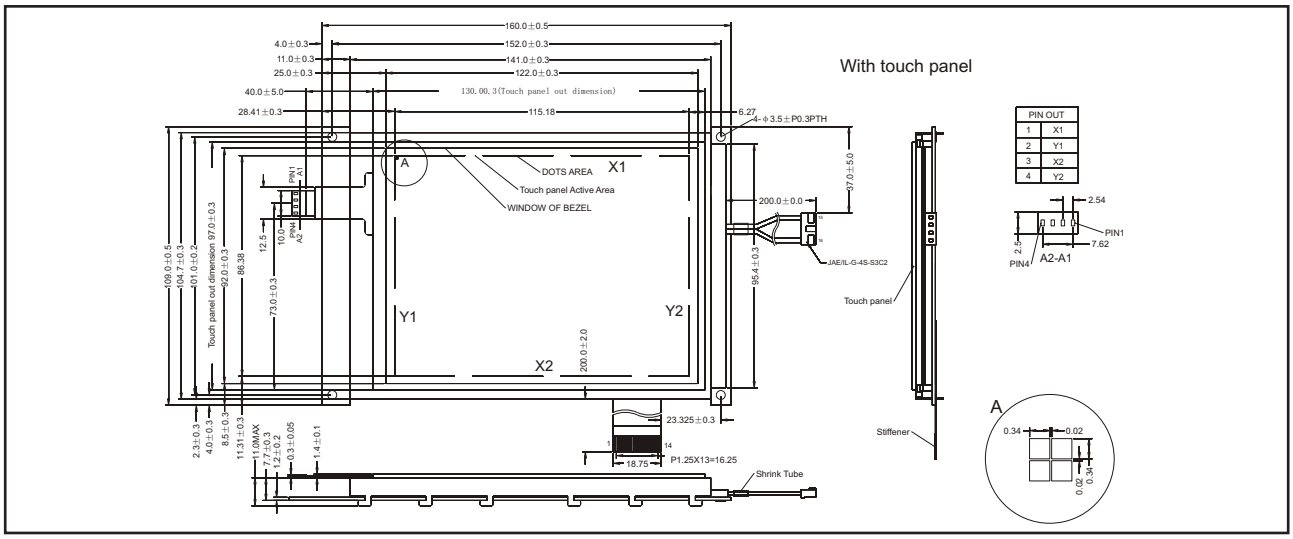

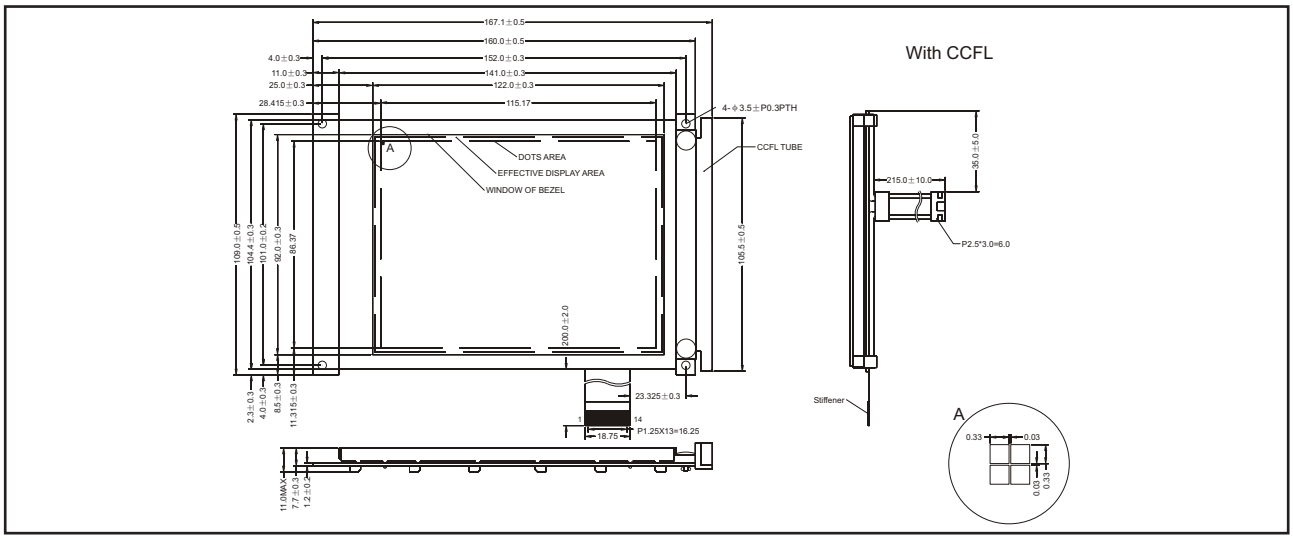

digital electronic gmbh • Tel. +49 (0) 8221/708-0 Fax. +49 (0) 8221/708-80

All specifications subject to change without notice.

STANDARD GRAPHIC MODULES

YMS 320240-05

320 X 240 DOTS, 1/240 DUTY, 1/13 BIAS

MECHANICAL DATA

ITEM	SPECIFICATION	UNIT
Module Size (W x H x T)	167.1 x 109.0 x 11.0	mm
Viewing Area (W x H)	122.0 x 92.0	mm
Number of Dots	320 x 240 with cursor	dots
Dot Pitch (W x H)	0.33 x 0.33	mm
Dot Size (W x H)	0.36 x 0.36	mm

ABSOLUTE MAXIMUM RATINGS

PARAMETER	SYMBOL	MIN.	MAX.	UNIT
Supply Voltage Logic	V_{DD} (V_{DD} - V_{SS})	-0.3	7.0	V
Supply Voltage Drive	V_{DD} - V_{EE}	-0.3	30.0	V
Input Voltage	V_{IN}	-0.3	V_{DD} +0.3	V
Operating Temperature	See page 8			
Storage Temperature				

PIN CONFIGURATION: CN_1 / CN_2 / CN_4

PIN	SYMBOL	SIGNAL DESCRIPTION
1-4	DB_0-DB_3	Data Bit
5	/DISPOFF	H: Display ON , L: Display OFF
6	FRAME	Indicates the Beginning of each Display Cycle
7	NC	No Connection
8	LOAD	Data Latch Pulse
9	CP	Data Shift Clock Pulse
10	V_{DD}	Supply oltage for Logic and LCD (+)
11	V_{SS}	Ground
12	V_{EE}	Supply Voltage for LCD (-)
13	V_0	Operating Voltage for LCD (variable)
14	FGND	Frame Ground

BLOCK DIAGRAM

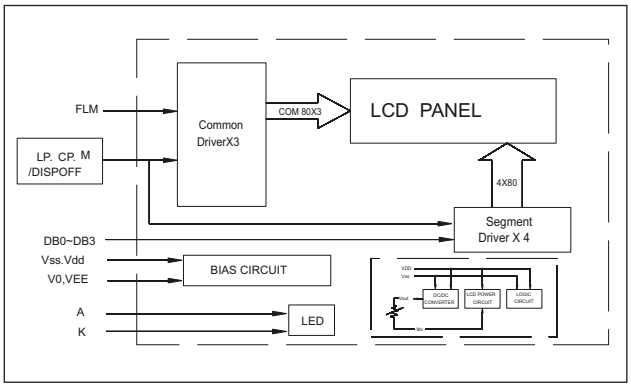

PIN CONFIGURATION: CN_3

PIN	SYMBOL	SIGNAL DESCRIPTION
1	FRAME	Indicates the Beginning of each Display Cycle
2	NC	No Connection
3	LOAD	Data Latch Pulse
4	CP	Data Shift Clock Pulse
5	/DISPOFF	H: Display ON , L: Display OFF
6-9	DB_0-DB_3	Data Bit
10	V_{DD}	Supply oltage for Logic and LCD (+)
11	V_{SS}	Ground
12	V_{EE}	Supply Voltage for LCD (-)
13	V_0	Operating Voltage for LCD (variable)
14	FGND	Frame Ground

BLOCK DIAGRAM

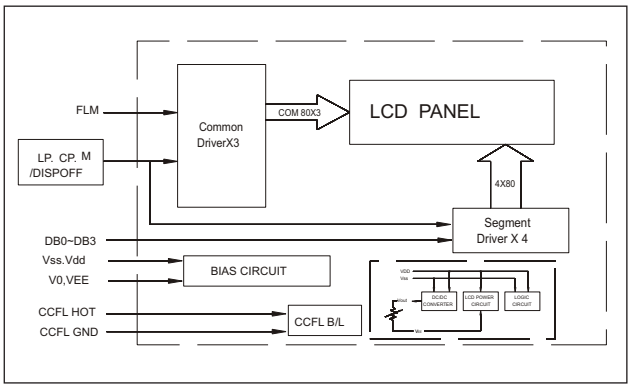

ELECTRICAL CHARACTERISTICS, Ta = 25°C

ITEM		SYMBOL	CONDITION	SPEC. VALUE			UNIT
				MIN.	TYP.	MAX.	
Supply Voltage (Logic)		V_{DD} - V_{SS}		4.5	5.0	5.5	V
Supply Current (Logic)		I_{DD}	V_{DD} =5V		8.7	13.0	mA
Input Voltage	HIGH	V_{IH}		0.5 V_{DD}		V_{DD}	V
	LOW	V_{IL}		V_{DD}		0.8	V
Output Voltage	HIGH	V_{OH}		2.4		0.2 V_{DD}	V
	LOW	V_{OL}				0.4	V
LCD Operating Voltage		V_{DD} - V_{EE}	V_{DD} =5V Ta=+25°C		22.0		V
Supply Current LCD Drive		I_{EE}			4.5	0.3	mA

Note (1): Value is high reliability type. Note (2): Electro-Optical Characteristics: See page 5.

BACKLIGHTING CHARACTERISTICS, Ta = 25°C, LED

ITEM	SYMBOL	CONDITION	SPEC. VALUE			UNIT
			MIN.	TYP.	MAX.	
Supply Voltage	V_F			500	600	V
Power Consumption	F_{OSC}			55		Hz
Luminous	I_V			500		cd/m²

STANDARD GRAPHIC MODULES

YMS 320240-05

320 X 240 DOTS, 1/240 DUTY, 1/13 BIAS

SEGMENT DRIVER APPLICATION TIMING

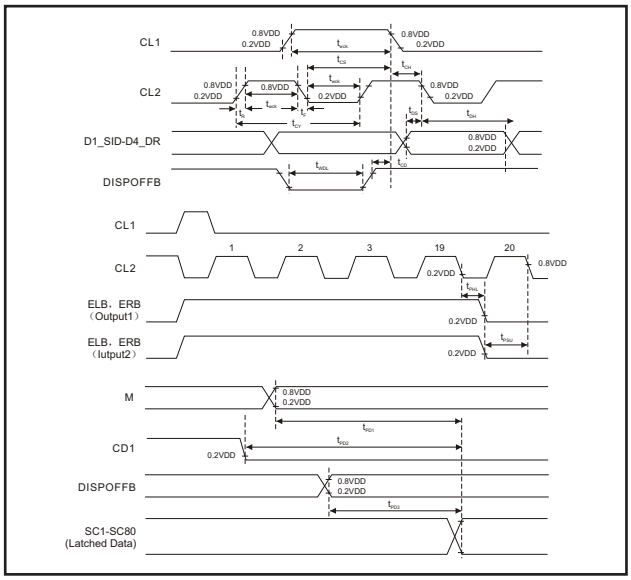

COMMON DRIVER APPLICATION TIMING

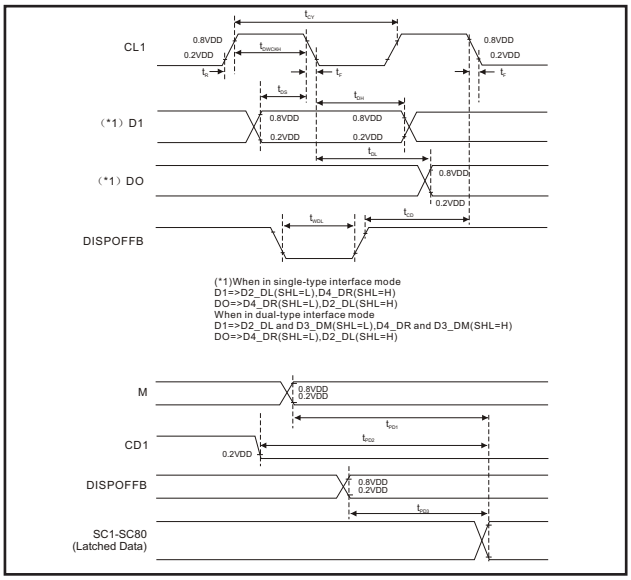

AC CHARACTERISTICS: SEGMENT DRIVER APPLICATION, V_{SS}= 0V , Ta=-30°C to +85°C

CHARACTERISTIC	SYMBOL	TEST CONDITION	V_{DD}= 5V ±10% (1)			V_{DD}= 3V ±10% (2)			UNIT
			MIN.	TYP.	MAX.	MIN.	TYP.	MAX.	
Clock Cycle Time	t_{CY}	Duty=50%	125			250			ns
Clock Pulse Width	t_{WCK}		45			95			ns
Clock Rise / Fall Time	t_R/t_F							30	ns
Data Setup Time	t_{DS}		30			65			ns
Data Hold Time	t_{DH}		30			65			ns
Clock Setup Time	t_{CS}		80			120			ns
Clock Hold Time	t_{CH}		80			120			ns
Propagation Delay Time	t_{PHL}	ELB Output			60			125	ns
		ERB Output			60			125	ns
ELB ERB Setup Time	t_{PSU}	ELB Input	30			65			ns
		ERB Input	30			65			ns
DISPOFFB Low Pulse Width	t_{WDL}		1.2			1.2			μ s
DISPOFFB Clear Time	t_{CD}		100			100			ns
M-OUT Propagation Delay Time	t_{PD1}	C_L=15pF			1.0			1.2	μ s
CLI-OUT Propagation Delay Time	t_{PD2}				1.0			1.2	μ s
DISPOFFB-OUT Propagation Delay Time	t_{PD3}				1.0				μ s

AC CHARACTERISTICS: COMMON DRIVER APPLICATION, V_{SS}= 0V , Ta=-30°C to +85°C

CHARACTERISTIC	SYMBOL	TEST CONDITION	V_{DD}= 5V ±10% (1)			V_{DD}= 3V ±10% (2)			UNIT
			MIN.	TYP.	MAX.	MIN.	TYP.	MAX.	
Clock Cycle Time	t_{CY}	Duty=50%	250			500			ns
Clock Pulse Width	t_{WCK}		45			95			ns
Clock Rise / Fall Time	t_R/t_F				50			50	ns
Data Setup Time	t_{DS}		30			65			ns
Data Hold Time	t_{DH}		30			65			ns
DISPOFFB Low Pulse Width	t_{WDL}		1.2			1.2			μ s
DISPOFFB Clear Time	t_{CD}		100			100			ns
Output Delay Time	t_{DL}	C_L=15pF			200			250	ns
M-OUT Propagation Delay Time	t_{PD1}				1.0			1.2	μ s
CLI-OUT Propagation Delay Time	t_{PD2}				1.0			1.2	μ s
DISPOFFB-OUT Propagation Delay Time	t_{PD3}				1.0			1.2	μ s

digital electronic gmbh • Tel. +49 (0) 8221/708-0 Fax. +49 (0) 8221/708-80

All specifications subject to change without notice.

STANDARD COG MODULES

YMS 162-08

16 CHAR x 2 LINE, 1/16 DUTY, 1/5 BIAS

EXTERNAL DIMENSION AND DISPLAY PATTERN

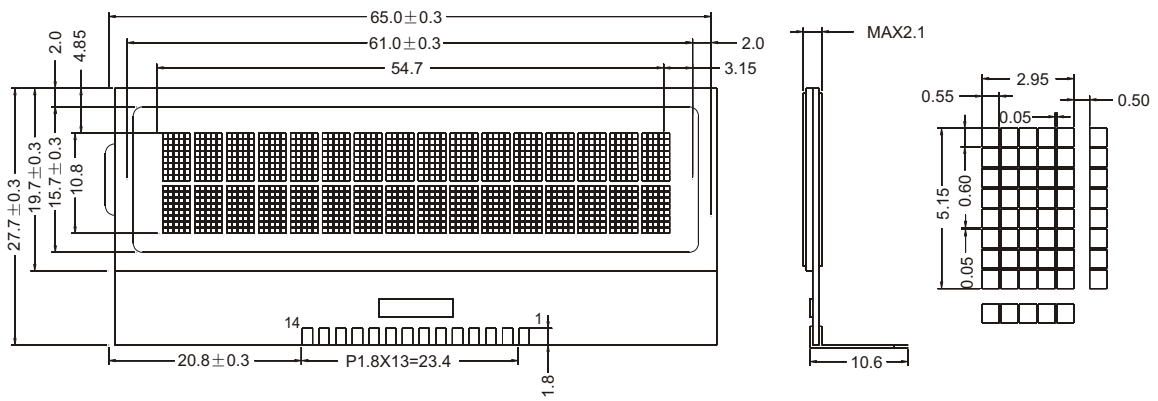

MECHANICAL DATA

ITEM	SPECIFICATION	UNIT
Module Size (W x H x T)	65.0 x 27.7 x 2.1	mm
Viewing Area (W x H)	61.0 x 15.7	mm
Character Font (W x H)	5.0 x 7.0 with cursor	dots
Character Size (W x H)	2.95 x 5.15	mm
Character Pitch (W x H)	3.45 x 5.65	mm
Dot Size (W x H)	0.55 x 0.60	mm

ABSOLUTE MAXIMUM RATINGS

PARAMETER	SYMBOL	MIN.	MAX.	UNIT
Supply Voltage Logic	V_{DD} - V_{SS}	-0.3	7.0	V
Supply Voltage Drive	V_{DD} - V_{EE}	-0.3	7.0	V
Input Voltage	V_{IN}	-0.3	V_{DD} +0.3	V
Operating Temperature	See page 8			
Storage Temperature				

PIN CONFIGURATION

PIN	SYMBOL	SIGNAL DESCRIPTION
1	V_{SS}	GND (0 V)
2	V_L	Voltage Contrast Control for LCD
3	V_{DD}	Power Supply (+5.0V)
4	RS	Register Select – LOW = Instruction, HIGH=DATA
5	R/W	Read / Write LOW = MPU to LCM, HIGH = LCM to MPU
6	E	Enable R/W = LOW: Data are talking over at falling edge R/W = HIGH: Data can be read at E = 1
7 to 14	DB_0 to DB_7	Data Bus – Software selectable 4 or 8 bit Mode

ELECTRICAL CHARACTERISTICS, Ta = 25°C

ITEM		SYMBOL	CONDITION	SPEC. VALUE			UNIT
				MIN.	TYP.	MAX.	
Supply Voltage (Logic)		V_{DD} - V_{SS}		4.5	5.0	5.5	V
Supply Current (Logic)		I_{DD}	V_{DD} =5V		0.8	2.0	mA
Input Voltage	HIGH	V_{IH}		2.2		V_{DD}	V
	LOW	V_{IL}		-0.3		0.6	V
Output Voltage	HIGH	V_{OH}	I_{OH}=0.2mA	2.4			V
	LOW	V_{OL}	I_{OL}=1.2mA			0.4	V
LCD Operating Voltage		V_{DD} - V_{EE}	V_{DD} =5V Ta=+25°C		4.4	5.0	V
Supply Current LCD Drive		I_{EE}			1.0	1.5	mA

Note (1): Value is high reliability type. Note (2): Electro-Optical Characteristics: See page 5.

BLOCK DIAGRAM

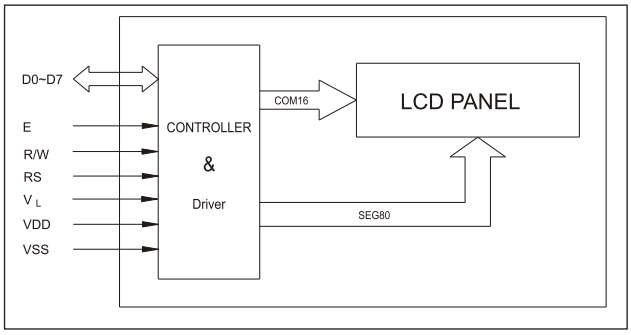

STANDARD COG MODULES

YMS 202-04

20 CHAR x 2 LINE, 1/16 DUTY, 1/5 BIAS

EXTERNAL DIMENSION AND DISPLAY PATTERN

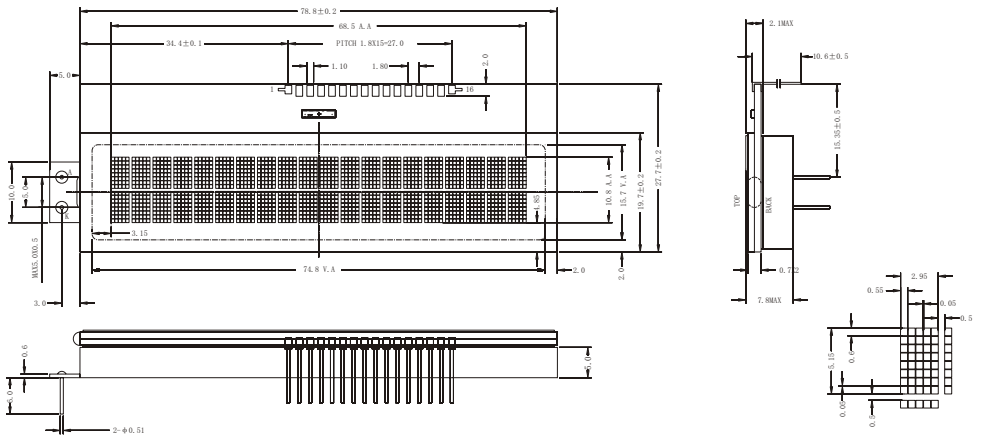

MECHANICAL DATA

ITEM	SPECIFICATION	UNIT
Module Size (W x H x T)	78.8 x 27.7 x 7.8	mm
Viewing Area (W x H)	74.8 x 15.7	mm
Number of Dots	20 x 2	dots
Character Size (W x H)	2.95 x 5.15	mm
Dot Size (W x H)	0.55 x 0.60	mm

ABSOLUTE MAXIMUM RATINGS

PARAMETER	SYMBOL	MIN.	MAX.	UNIT
Supply Voltage Logic	V_{DD}	-0.3	7.0	V
Supply Voltage Drive	V_1 - V_5	GND	V_{DD} +0.3	V
Input Voltage	V_{IN}	-0.3	V_{DD} +0.3	V
Operating Temperature	See page 8			
Storage Temperature				

PIN CONFIGURATION

PIN	SYMBOL	SIGNAL DESCRIPTION
1	NC	No Connection
2	V_{SS}	GND (0V)
3	V_L	Voltage Control for LCD
4	V_{DD}	Power Supply (5V)
5	RS	Register Select – LOW = Instruction, HIGH=DATA
6	R/W	Read / Write LOW = MPU to LCM, HIGH = LCM to MPU
7	E	Enable R/W = LOW: Data are talking over at falling edge R/W = HIGH: Data can be read at E = 1
8 to 15	DB_0 to DB_7	Data Bus – Software selectable 4 or 8 bit Mode
16	NC	No Connection

ELECTRICAL CHARACTERISTICS, Ta = 25°C

ITEM		SYMBOL	CONDITION	SPEC. VALUE			UNIT
				MIN.	TYP.	MAX.	
Supply Voltage (Logic)		V_{DD} - V_{SS}		4.5	5.0	5.5	V
Supply Current (Logic)		I_{DD}	V_{DD} =5V		1.0	2.0	mA
Input Voltage	HIGH	V_{IH}		0.8 V_{DD}		V_{DD}	V
	LOW	V_{IL}		-0.3		0.2 V_{DD}	V
Output Voltage	HIGH	V_{OH}	I_{OH}=1.2mA	V_{DD} -0.6			V
	LOW	V_{OL}	I_{OL}=1.2mA			GND+0.6	V
LCD Operating Voltage		V_{DD} - V_{EE}	V_{DD} =5V Ta=+25°C		4.7	5.0	V
Supply Current LCD Drive		I_{EE}			1.0	1.5	mA

Note (1): Value is high reliability type. Note (2): Electro-Optical Characteristics: See page 5.

BLOCK DIAGRAM

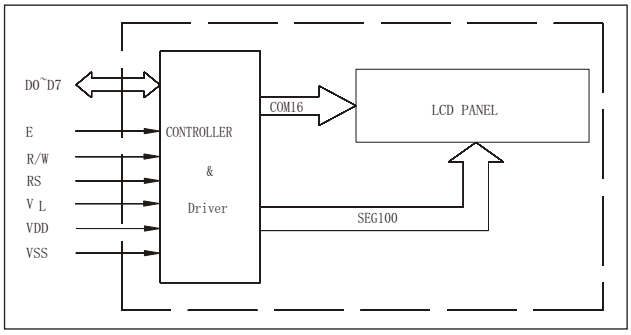

digital electronic gmbh • Tel. +49 (0) 8221/708-0 Fax. +49 (0) 8221/708-80

All specifications subject to change without notice.

STANDARD COG MODULES

YMS 202-04

20 CHAR x 2 LINE, 1/16 DUTY, 1/5 BIAS

INTERFACE TIMING CHARACTERISTICS : WRITE CYCLE

V_{DD}=+5.0V

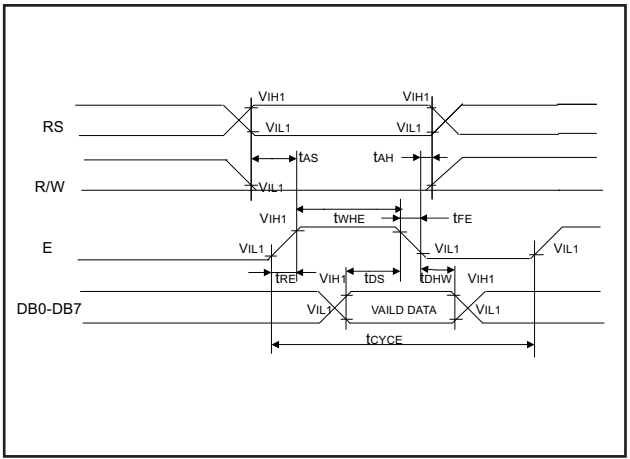

PARAMETER	SYMBOL	MIN.	MAX.	UNIT
E Cycle Time	t_{CYCE}	500		ns
Enable High Level Pulse Width	t_{WHE}	300		ns
Enable Rise Time	t_{RE}		25	ns
Enable Fall Time	t_{FE}		25	ns
RS,R/W Address Setup Time	t_{AS}	60*1 100*2		ns
RS,R/W Address Hold Time	t_{AH}	10		ns
Data Output Delay	t_{DS}	100		ns
Data Hold Time	t_{DHW}	100		ns

Note (1): 8-bit operation mode. Note (2): 4-bit operation mode

INTERFACE TIMING CHARACTERISTICS : READ CYCLE

V_{DD}=+5.0V

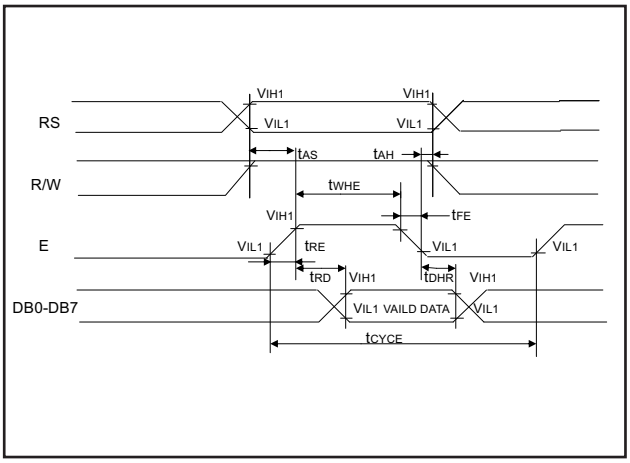

PARAMETER	SYMBOL	MIN.	MAX.	UNIT
E Cycle Time	t_{CYCE}	500		ns
Enable High Level Pulse Width	t_{WHE}	300		ns
Enable Rise Time	t_{RE}		25	ns
Enable Fall Time	t_{FE}		25	ns
RS,R/W Address Setup Time	t_{AS}	60*1 100*2		ns
RS,R/W Address Hold Time	t_{AH}	10		ns
Data Output Delay	t_{RD}		190	ns
Data Hold Time	t_{DHR}	20		ns

Note (1): 8-bit operation mode. Note (2): 4-bit operation mode

POWER SUPPLY CONDITIONS USING INTERNAL RESET CIRCUIT

V_{DD}=+5.0V

Interface Signals with Segment Driver LSI

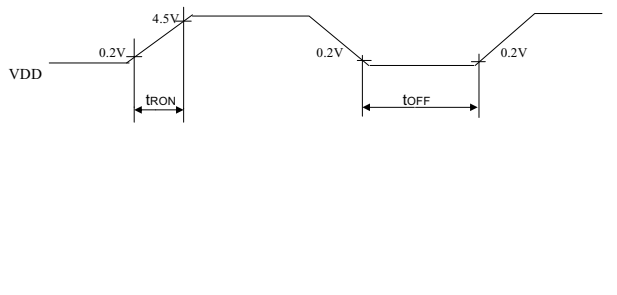

PARAMETER	SYMBOL	MIN.	MAX.	UNIT
Power Supply Rise Time	t_{RON}	0.1	10	ms
Power Supply OFF Time	t_{OFF}	1.0		ms

Note (3): T_{OFF} stipulates the time of power OFF for instantaneous power supply to or when power suplly repeats ON and OFF.

STANDARD COG MODULES

YMS 12864-06

128 X 64 DOTS, 1/64 DUTY, 1/9 BIAS

EXTERNAL DIMENSION AND DISPLAY PATTERN

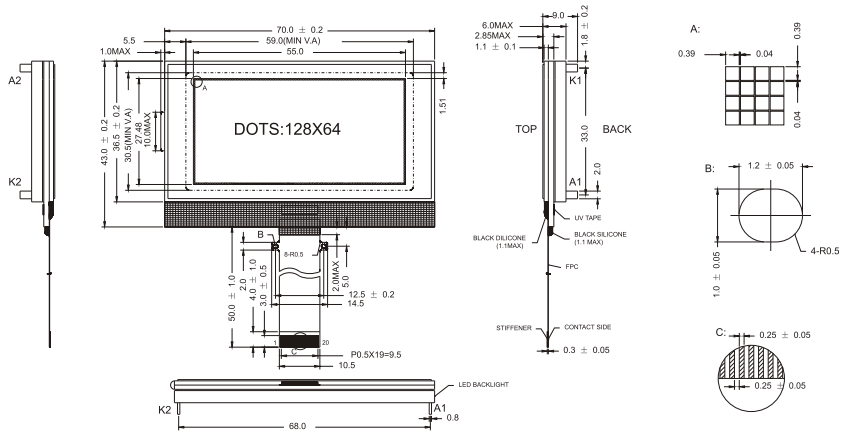

MECHANICAL DATA

ITEM	SPECIFICATION	UNIT
Module Size (W x H x T)	70.0 x 43.0 x 9.0	mm
Viewing Area (W x H)	59.0 x 30.5	mm
Number of Dots	128 x 64	dots
Dot Pitch (W x H)	0.43 x 0.43	mm
Dot Size (W x H)	0.39 x 0.39	mm

ABSOLUTE MAXIMUM RATINGS

PARAMETER	SYMBOL	MIN.	MAX.	UNIT
Supply Voltage Logic	V_{DD} (V_{DD} - V_{SS})	-0.3	7.0	V
Supply Voltage Drive	V_{DD} - V_{EE}	-0.3	18.0	V
Input Voltage	V_{IN}	-0.3	V_{DD} +0.3	V
Operating Temperature	See page 8			
Storage Temperature				

PIN CONFIGURATION

PIN	SYMBOL	SIGNAL DESCRIPTION
1	NC	No Connection
2	V_0	LCD Driver Supply Voltage
3	V_4	LCD Driver Supply Voltage
4	V_3	LCD Driver Supply Voltage
5	V_2	LCD Driver Supply Voltage
6	V_1	LCD Driver Supply Voltage
7	C_{2-}	Capacitor 2 Negative Connection Pin for Voltage Converter
8	C_{2+}	Capacitor 2 Positive Connection Pin for Voltage Converter
9	C_{1+}	Capacitor 1 Positive Connection Pin for Voltage Converter
10	C_{1-}	Capacitor 1 Negative Connection Pin for Voltage Converter
11	C_{3+}	Capacitor 3 Positive Connection Pin for Voltage Converter
12	V_{OUT}	Voltage Converter Input / Output Pin
13	V_{SS}	Ground
14	V_{DD}	Power Supply
15	SI	Serial Input Clock
16	SCL	Serial Input Data
17	RS	Register Select Input Pin
18	/RES	Reset Signal
19	/CS	Chip Select Signal
20	NC	No Connection

BLOCK DIAGRAM

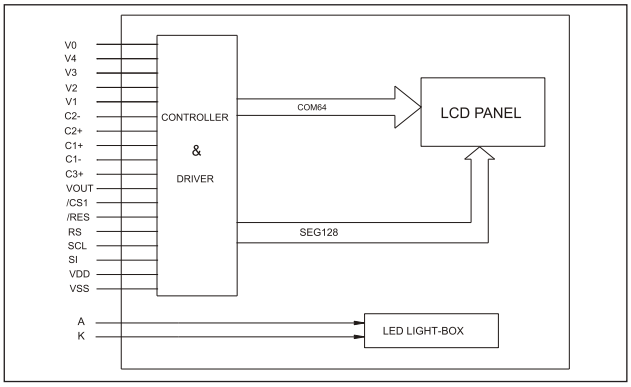

digital electronic gmbh • Tel. +49 (0) 8221/708-0 Fax. +49 (0) 8221/708-80

All specifications subject to change without notice.

STANDARD COG MODULES

YMS 12864-06

128 X 64 DOTS, 1/64 DUTY, 1/9 BIAS

ELECTRICAL CHARACTERISTICS, Ta = 25°C

ITEM		SYMBOL	CONDITION	SPEC. VALUE			UNIT
				MIN.	TYP.	MAX.	
Supply Voltage (Logic)		V_{DD} - V_{SS}		2.7	3.0	3.3	V
Supply Current (Logic)		I_{DD}	V_{DD} =3V		1.0	1.2	mA
Input Voltage	HIGH	V_{IH}		0.7 V_{DD}		V_{DD}	V
	LOW	V_{IL}		0		0.3 V_{DD}	V
Output Voltage	HIGH	V_{OH}	I_{OH}=0.205mA	2.4			V
	LOW	V_{OL}	I_{OL} =1.6mA			0.4	V
LCD Operating Voltage		V_{DD} - V_{EE}	V_{DD} =3V Ta=+25°C		9.0		V
Supply Current LCD Drive		I_{EE}			0.8	1.0	mA

Note (1): Value is high reliability type. Note (2):Electro-Optical Characteristics: See page 5.

INTERFACE TIMING CHARACTERISTICS

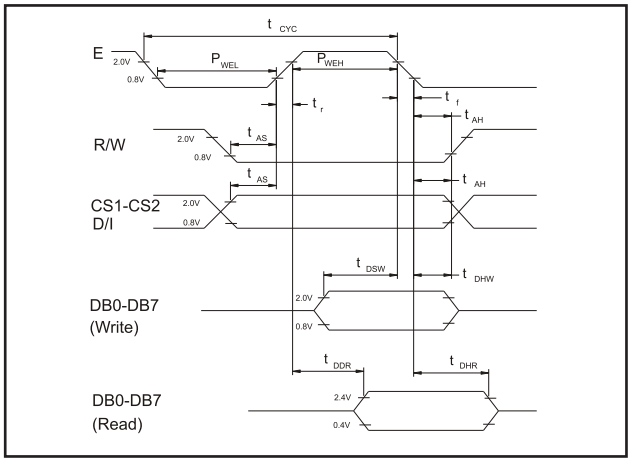

PARAMETER	SYMBOL	MIN.	MAX.	UNIT
Enable Cycle Time	t_{CYC}	1000		ns
Enable High Level Width	t_{WEH}	450		ns
Enable Low Level Width	t_{WEL}	450		ns
Enable Rise Time	t_R		25	ns
Enable Fall Time	t_F		25	ns
Address Setup Time	t_{AS}	140		ns
Address Hold Time	t_{AH}	10		ns
Data Setup Time	t_{DSW}	200		ns
Data Delay Time	t_{DDR}		320	ns
Data Hold Time - Write	t_{DHW}	10		ns
Data Hold Time - Read	t_{DHR}	20		ns

Condition: V_{DD}=+5.0V ±10%, V_{SS}=0V, Ta=+25°C

STANDARD COG MODULES

YMS 12864-15

128 X 64 DOTS, 1/65 DUTY, 1/9 BIAS

EXTERNAL DIMENSION AND DISPLAY PATTERN

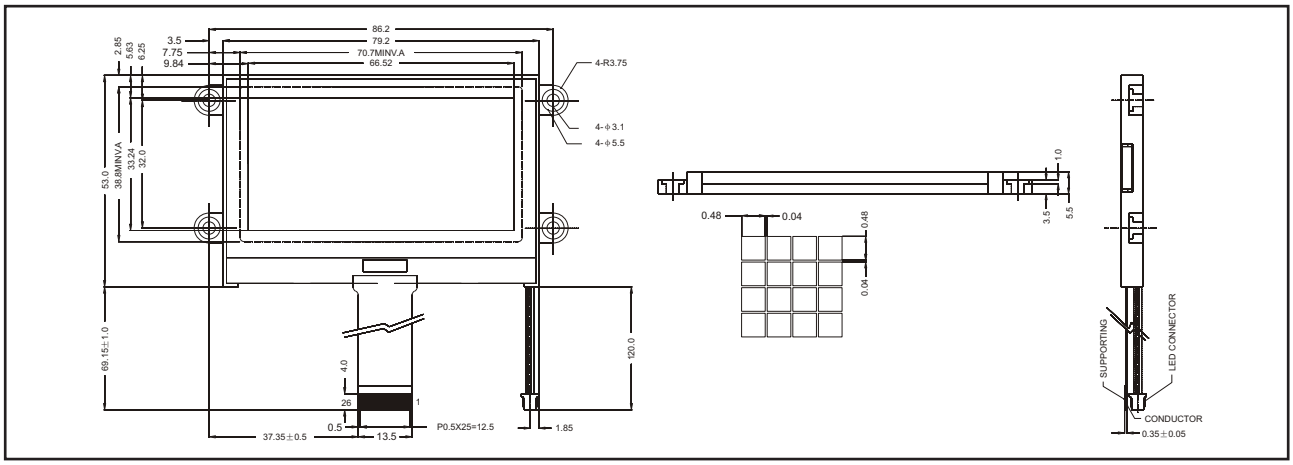

MECHANICAL DATA

ITEM	SPECIFICATION	UNIT
Module Size (W x H x T)	93.7 x 53.0 x 5.5	mm
Viewing Area (W x H)	70.7 x 38.8	mm
Number of Dots	128 x 64	dots
Dot Pitch (W x H)	0.52 x 0.52	mm
Dot Size (W x H)	0.48 x 0.48	mm

ABSOLUTE MAXIMUM RATINGS

PARAMETER	SYMBOL	MIN.	MAX.	UNIT
Supply Voltage Logic	V_{DD} (V_{DD} - V_{SS})	-0.3	7.0	V
Supply Voltage Drive	V_{DD} - V_{EE}	-0.3	17.0	V
Input Voltage	V_{IN}	-0.3	V_{DD} +0.3	V
Operating Temperature	See page 8			
Storage Temperature				

PIN CONFIGURATION

PIN	SYMBOL	SIGNAL DESCRIPTION
1	$/CS_1$	Chip Select Signal
2	/RES	Reset Signal
3	A_0	Register Select Signal
4	R/W	Read / Write Execution Control
5	E	Enable Signal
6-13	DB_0-DB_7	Data Bus Line
14	V_{DD}	Power Signal
15	V_{SS}	Ground
16	V_{OUT}	Voltage Converter Input / Output
17	CAP_{3-}	Capacitor 3 Negative Connection Pin for oltage Converter
18	CAP_{1+}	Capacitor 1 Positive Connection Pin for oltage Converter
19	CAP_{1-}	Capacitor 1 Negative Connection Pin for oltage Converter
20	CAP_{2-}	Capacitor 2 Negative Connection Pin for oltage Converter
21	CAP_{2+}	Capacitor 2 Positive Connection Pin for oltage Converter
22	V_1	LCD Driver Supply Voltage
23	V_2	LCD Driver Supply Voltage
24	V_3	LCD Driver Supply Voltage
25	V_4	LCD Driver Supply Voltage
26	V_5	LCD Driver Supply Voltage

BLOCK DIAGRAM

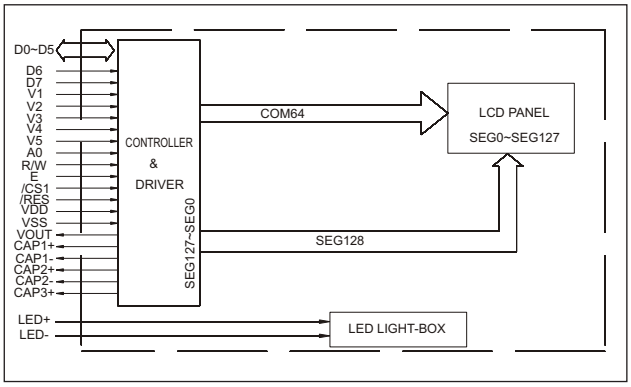

digital electronic gmbh • Tel. +49 (0) 8221/708-0 Fax. +49 (0) 8221/708-80

All specifications subject to change without notice.

STANDARD COG MODULES

YMS 12864-15

128 X 64 DOTS, 1/65 DUTY, 1/9 BIAS

ELECTRICAL CHARACTERISTICS, Ta = 25°C

ITEM		SYMBOL	CONDITION	SPEC. VALUE			UNIT
				MIN.	TYP.	MAX.	
Supply Voltage (Logic)		V_{DD} - V_{SS}		2.4	3.0	5.5	V
Supply Current (Logic)		I_{DD}	V_{DD} =3V	1.0		3.0	mA
Input Voltage	HIGH	V_{IH}		0.8 V_{DD}		V_{DD}	V
	LOW	V_{IL}		V_{SS}		0.2 V_{DD}	V
Output Voltage	HIGH	V_{OH}	I_{OH}=0.5mA	0.8 V_{DD}		V_{DD}	V
	LOW	V_{OL}	I_{OL} =0.5mA	V_{SS}		0.2 V_{DD}	V
LCD Operating Voltage		V_{DD} - V_{EE}	V_{DD} =3V Ta=+25°C		8.5		V
Supply Current LCD Drive		I_{EE}		0.8		1.6	mA

Note (1): Value is high reliability type. Note (2): Electro-Optical Characteristics: See page 5.

BACKLIGHTING CHARACTERISTICS, Ta = 25°C, LED

ITEM	SYMBOL	CONDITION	SPEC. VALUE			UNIT
			MIN.	TYP.	MAX.	
Supply Voltage	V_{EL}	I_F=135mA	3.2	3.5	3.8	V
Power Consumption	P_{LED}			472.5		mW
Luminous	I_V					cd/m^2

INTERFACE TIMING CHARACTERISTICS

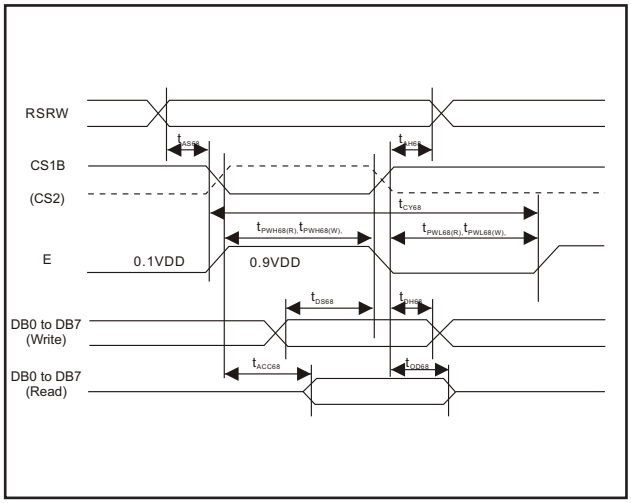

Condition: $t_{PWH68(W)}$ and $t_{PWH68(R)}$ is specified in the overlapped period when CS_{1B} is low (CS_2 is high) and E is high.

PARAMETER	SIGNAL	SYMBOL	MIN.	MAX.	UNIT
Address Hold Time	RS, RW	t_{AH68}	0		ns
Address Setup Time		t_{AS68}	0		ns
E Cycle Time	E	t_{CY68}	166		ns
Enable Pulse High Width Read	E	$t_{PWH68(R)}$	70		ns
Enable Pulse High Width Write	E	$t_{PWH68(W)}$	30		
Enable Pulse Low Width Read	E	$t_{PWL68(R)}$	30		ns
Enable Pulse Low Width Write	E	$t_{PWL68(W)}$	30		
Data Setup Time	DB_7-DB_0	t_{DS68}	30		ns
Data Hold Time		t_{DH68}	10		
Access Time, C_L=100pF		t_{ACC68}		70	ns
Output Disable Time, C_L=100pF		$t_{OD68,}$	10	50	ns

Condition: V_{DD}=4.5 to 5.5V ±10%, Ta=-40°C to +85°C

STANDARD COG MODULES

YMS 12864-18

128 X 64 DOTS, 1/64 DUTY, 1/9 BIAS

EXTERNAL DIMENSION AND DISPLAY PATTERN

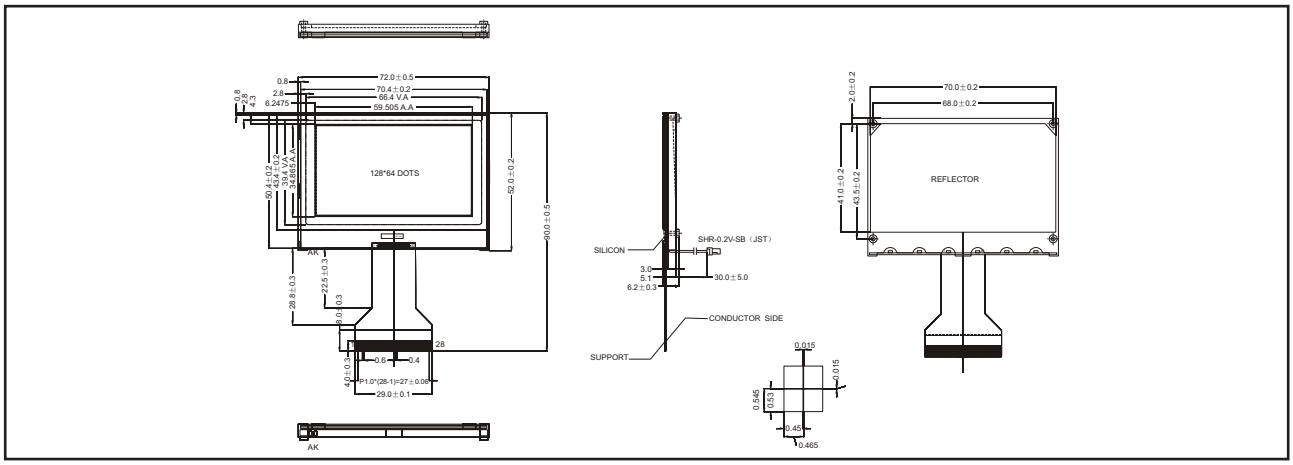

MECHANICAL DATA

ITEM	SPECIFICATION	UNIT
Module Size (W x H x T)	72.0 x 90.0 x 7.0	mm
Viewing Area (W x H)	66.4 x 39.4	mm
Number of Dots	128 x 64	dots
Dot Pitch (W x H)	0.465 x 0.545	mm
Dot Size (W x H)	0.45 x 0.53	mm

ABSOLUTE MAXIMUM RATINGS

PARAMETER	SYMBOL	MIN.	MAX.	UNIT
Supply Voltage Logic	V_{DD} - V_{SS}	-0.3	7.0	V
Supply Voltage Drive	V_{DD} - V_{EE}	-0.3	30.0	V
Input Voltage	V_{IN}	-0.3	V_{DD} +0.3	V
Operating Temperature	See page 8			
Storage Temperature				

PIN CONFIGURATION

PIN	SYMBOL	SIGNAL DESCRIPTION
1	P/S	Parallel / Serial Data Input Select Input
2	C_{86}	Microprocessor Interface Select Input Signal in Parallel Mode
3-7	V_5-V_1	LCD Driver Supply oltges
8-9	CAP_{2+}, CAP_{2-}	Capacitor 2 Positive/Negative Connection Pin for Voltage Converter
10-11	CAP_{1+}, CAP_{1-}	Capacitor 1 Positive/Negative Connection Pin for Voltage Converter
12	CAP_{3-}	Capacitor 3 Negative Connection Pin for Voltage Converter
13	V_{OUT}	Voltage Converter Input / Output Pin
14	V_{SS}	Ground
15	V_{DD}	Power Supply
16	D_7 (SI)	Data Bit 7 (Serial Input Data)
17	D_6 (SCL)	Data Bit 6 (Serial Input Clock)
18-23	D_5-D_0	Data Bit 5 - Data Bit 0
24	/RD (E)	Read Execution Control (Enable)
25	/WR (R/W)	Write Execution Control (Read / Write)
26	A_0	H: Data, L: Instruction Code
27	/RES	Reset Signal
28	/CS_1	Chip Select Signal

BLOCK DIAGRAM

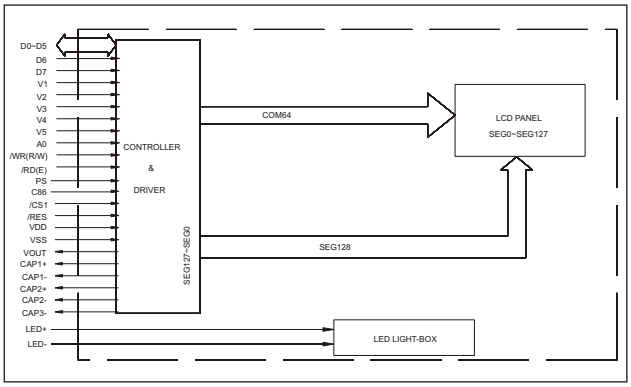

BACKLIGHTING CHARACTERISTICS, Ta = 25°C, LED

ITEM	SYMBOL	CONDITION	SPEC. VALUE			UNIT
			MIN.	TYP.	MAX.	
Supply Voltage	V_{LED}	I_F=90mA	2.85	3.2	3.4	V
Power Consumption	P_{LED}	I_F=90mA		288	306	mW
Luminous				60		cd/m²

ELECTRICAL CHARACTERISTICS, Ta = 25°C

ITEM		SYMBOL	CONDITION	SPEC. VALUE			UNIT
				MIN.	TYP.	MAX.	
Supply Voltage (Logic)		V_{DD} - V_{SS}		2.7		3.3	V
Supply Current (Logic)		I_{DD}	V_{DD} =3.3V	0.8		1.2	mA
Input Voltage	HIGH	V_{IH}		V_{DD} -2.2		V_{DD}	V
	LOW	V_{IL}		0		0.8	V
Output Voltage	HIGH	V_{OH}		V_{DD} -0.3		V_{DD}	V
	LOW	V_{OL}		0		0.3	V
LCD Operating Voltage		V_{DD} - V_{EE}	V_{DD} =3.3V Ta=+25°C		9.7		V
Supply Current LCD Drive		I_{EE}		0.7		1.0	mA

Note (1): Value is high reliability type. Note (2): Electro-Optical Characteristics: See page 5.

digital electronic gmbh • Tel. +49 (0) 8221/708-0 Fax. +49 (0) 8221/708-80

All specifications subject to change without notice.

STANDARD COG MODULES

YMS 12864-18

128 X 64 DOTS, 1/64 DUTY, 1/9 BIAS

INTERFACE TIMING CHARACTERISTICS

System Bus Read / Write Characteristics 1 (8080 Series MPU)

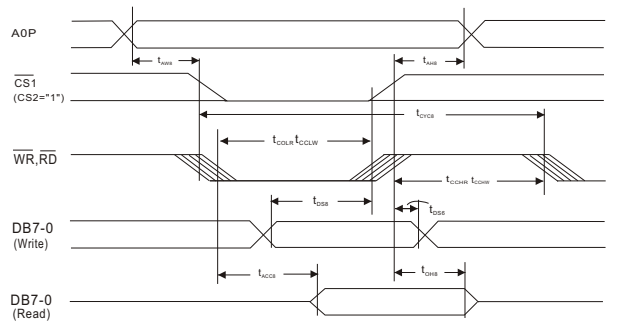

Test Conditions: V_{DD}= 2.7V to 4.5V, Ta=-25°C						
PARAMETER	SIGNAL	SYMBOL	TEST CONDITIONS	MIN.	MAX.	UNIT
Address Hold Time	AOP	t_{AH8}		0		ns
Address Setup Time		t_{AW8}		0		ns
System Cycle Time	AOP	t_{CYC8}		300		ns
Control L Pulse Width	/WR	t_{CCLW}		60		ns
Control L Pulse Width	/RD	t_{CCLR}		120		ns
Control H Pulse Width	/WR	t_{CCHW}		60		ns
Control H Pulse Width	/RD	t_{CCHR}		60		ns
Data Setup Time	DB_7 to DB_0	t_{DS8}		40		ns
Address Hold Time		t_{DH8}		15		ns
RD Access Time		t_{ACC8}	C_L=100pF		140	ns
Output Disable Time		t_{CH8}		10	100	ns

System Bus Read / Write Characteristics 2 (6800 Series MPU)

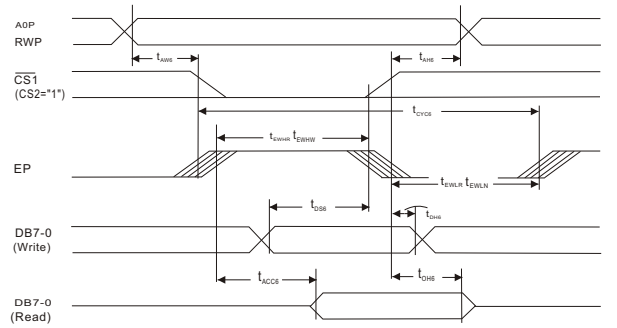

Test Conditions: V_{DD}= 2.7V to 4.5V, Ta=-25°C							
PARAMETER		SIGNAL	SYMBOL	TEST CONDITIONS	MIN.	MAX.	UNIT
Address Hold Time		AOP	t_{AH6}		0		ns
Address Setup Time			t_{AW6}		0		ns
System Cycle Time		AOP	t_{CYC6}		300		ns
Data Setup Time		DB_7 to DB_0	t_{DS6}	C_L=100pF	40		ns
Address Hold Time			t_{DH6}		15		ns
RD Access Time			t_{ACC6}			140	ns
Output Disable Time			t_{CH6}		10	100	ns
Enable H Pulse Time	Read	EP	t_{EWHR}		120		ns
	Write		t_{EWHW}		60		ns
Enable L Pulse Time	Read	EP	t_{EWLR}		60		ns
	Write		t_{EWLW}		60		ns

The Serial Interface

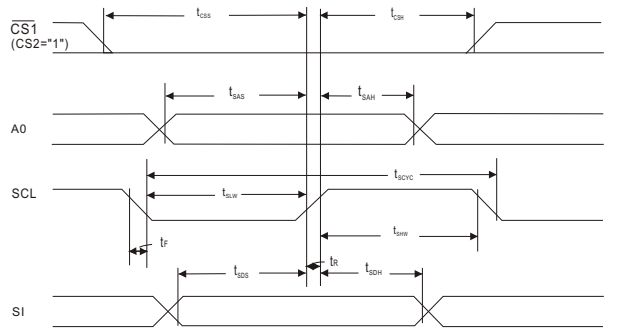

Test Conditions: V_{DD}= 2.7V to 4.5V, Ta=-25°C						
PARAMETER	SIGNAL	SYMBOL	TEST CONDITIONS	MIN.	MAX.	UNIT
Senal Clock Period	SCL	t_{SCYC}		250		ns
SCL „H“ Pulse Width		t_{SHW}		100		ns
SCL „L“ Pulse Width		t_{SLW}		100		ns
Address Setup Time	AOP	t_{SAS}		150		ns
Address Hold Time		t_{SAH}		150		ns
Data Setup Time	SI	t_{SDS}		100		ns
Data Hold Time		t_{SDH}		100		ns
CS-SCL Time	CS	t_{CSS}		150		ns
		t_{CSH}		150		ns

STANDARD COG MODULES

YMS 12864-20

128 X 64 DOTS, 1/65 DUTY, 1/9 BIAS

EXTERNAL DIMENSION AND DISPLAY PATTERN

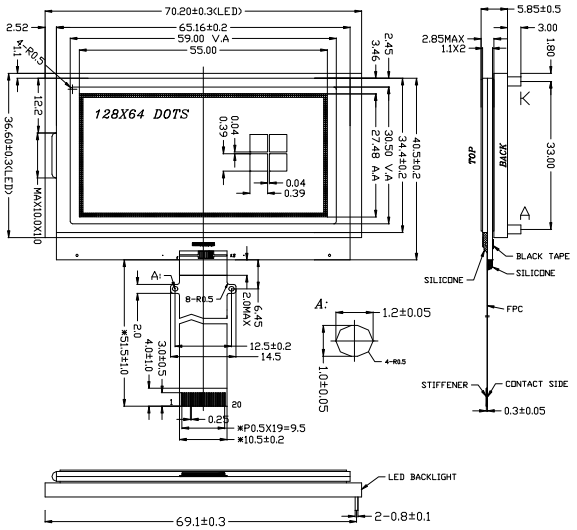

PIN	SYMBOL	PIN	SYMBOL
1	NC	11	NC
2	NC	12	NC
3	NC	13	VSS
4	NC	14	VDD
5	NC	15	SDA
6	VG	16	SCL
7	NC	17	A0
8	NC	18	RSTB
9	XV0	19	CSB
10	V0	20	NC

MECHANICAL DATA

ITEM	SPECIFICATION	UNIT
Module Size (W x H x T)	70.2 x 40.5 x 5.85	mm
Viewing Area (W x H)	59.0 x 30.5	mm
Number of Dots	128 x 64	dots
Dot Pitch (W x H)	0.43 x 0.43	mm
Dot Size (W x H)	0.39 x 0.39	mm

ABSOLUTE MAXIMUM RATINGS

*Note1

PARAMETER	SYMBOL	MIN.	MAX.	UNIT
Digital Power Supply Voltage	V_{DD1}	-0.3	3.6	V
Analog Power Supply Voltage	V_{DD2}-V_{DD3}	-0.3	3.6	
LCD Power Supply Voltage	V_0 - XV_0	-0.3	1.6	V
	V_G	-0.3	3.6	
	V_M	-0.3	V_{DD2}	
Input Voltage	V_{IN}	-0.3	V_{DD1} +0.3	V
Operating Temperature	See page 8			
Storage Temperature				

Note (1): Stresses above those listed under Limiting Values may cause permanent dmage to the device. Parameters are valid over operating temperature range unless otherwise specified. All voltages are with respect to V_{SS} unless otherwise noted. Insure the voltage levels of V_0, V_{DD2}, V_G, V_M, V_{SS} and XV_0 always match the correct relation: $V_0 \geq V_{DD2} > V_G > V_M > V_{SS} \geq XV_0$

PIN CONFIGURATION

PIN	SYMBOL	SIGNAL DESCRIPTION
1-5	NC	No Connection
6	V_G	LCD Driving Voltage for Segment Circuit
7-8	NC	No Connection
9	XV_0	LCD Driving Voltage for Common Circuit t at Positive Frame
10	V_0	LCD Driving Voltage for Common Circuit t at Negative Frame
11-12	NC	No Connection
13	V_{SS}	Ground
14	V_{DD}	Power Supply
15	SDA	Serial Data Input
16	SCL	Serial Clock Input
17	A_0	Data or Command
18	RSTB	Hardware Reset Input Pin
19	CSB	Chip Select Input Pin
20	NC	No Connection

BLOCK DIAGRAM

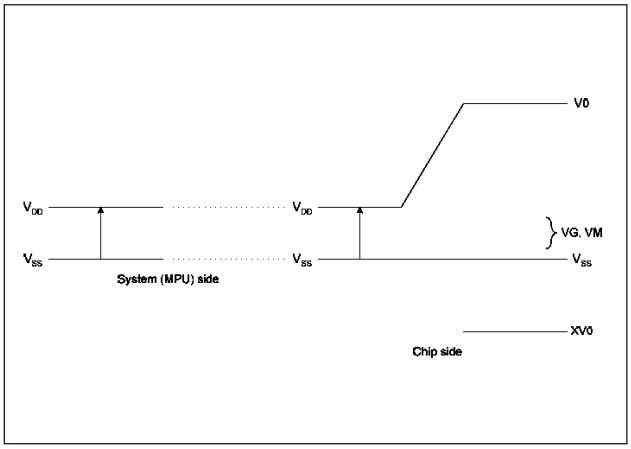

digital electronic gmbh • Tel. +49 (0) 8221/708-0 Fax. +49 (0) 8221/708-80

All specifications subject to change without notice.

STANDARD COG MODULES

YMS 12864-20

128 X 64 DOTS, 1/65 DUTY, 1/9 BIAS

ELECTRICAL CHARACTERISTICS, Ta = 25°C

ITEM		SYMBOL	CONDITION	SPEC. VALUE			UNIT
				MIN.	TYP.	MAX.	
Supply Voltage (Logic)		V_{DD} - V_{SS}			3.0		V
LCD Operating Voltage		V_0 - V_{SS}	Ta=+25°C		8.3		V
Response Time		T_{ON} T_{OFF}			89 305		ms
Contrast		CR		2.0			
Viewing Angle	12H	θ1	CR ≥ 2.0		60		Deg.
	6H	θ2			70		
	3H	θ3			65		
	9H	θ4			65		

Note (1): Value is high reliability type.

Note (2): Electro-Optical Characteristics: See page 5.

BACKLIGHTING CHARACTERISTICS, Ta = 25°C, LED

ITEM	SYMBOL	CONDITION	SPEC. VALUE			UNIT
			MIN.	TYP.	MAX.	
Forward Voltage	V_f	I_F=30mA	4.3	4.5	4.7	V
Forward Current	I_F			30	40	mA
Power Dissipation	P_d	I_F=30mA		0.135		W
Reverse Voltage	V_r			5.0		V
Reverse Current	I_r			0.2		mA
Luminous Intensity	L_V	I_F=30mA	40	50		cd/m²
Luminous Uniformity	ΔL_V	I_F=30mA	70			%
Chromaticity Coordinate	X	I_F =15mA each chip	0.27		0.31	
	Y		0.27		0.31	

Note (3): Operating Temperature Range T_{opr} -20°C to +65°C; Storage Temperature Range T_{stg} -30°C to +70°C.
Color: White.
Backlight is a kind of current device, it must connect a resistance for limiting current or it will be damaged.

INTERFACE TIMING CHARACTERISTICS

System Bus Timing for 4-Line Serial Interface

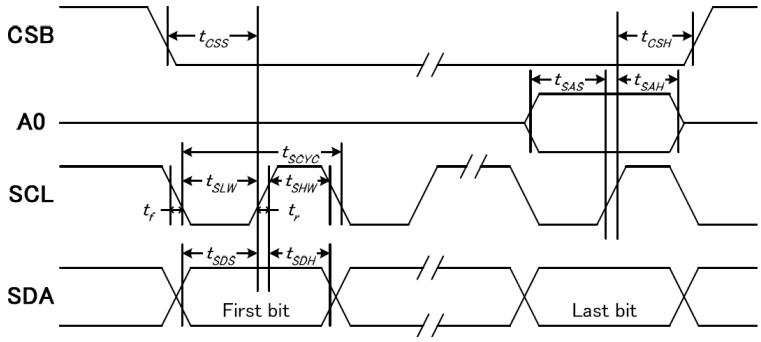

AC CHARACTERISTICS, V_{DD} = 3.3V, Ta = 25°C

PARAMETER	SIGNAL	SYMBOL	MIN.	MAX.	UNIT
Serial Clock Period	SCLK	t_{SCYC}	50		ns
SCLK „H“ Pulse Width		t_{SHW}	25		ns
SCLK „L“ Pulse Width		t_{SLW}	25		ns
Address Setup Time	A_0	t_{SAS}	20		ns
Address Hold Time		t_{SAH}	10		ns
Data Setup Time	SDA	t_{SDS}	20		ns
Dta Hold Time		t_{SDH}	10		ns
CSB-SCLK Time	CSB	t_{CSS}	20		ns
CSB-SCLK Time		t_{CSH}	40		ns

Note (4): The Input Signal Rise and Fall Time (tr, tf) are specified at 15 ns or less.

Note (5): All Timing is specified using 20% and 80% of V_{DD1} as the Standard.

STANDARD COF MODULES

YMS 160160-01

160 X 160 DOTS, 1/160 DUTY, 1/13 BIAS

EXTERNAL DIMENSION AND DISPLAY PATTERN

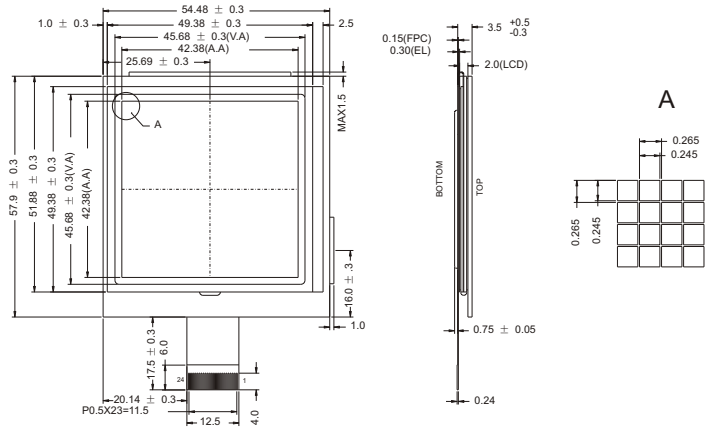

MECHANICAL DATA

ITEM	SPECIFICATION	UNIT
Module Size (W x H x T)	54.48 x 57.9 x 3.5	mm
Viewing Area (W x H)	45.68 x 45.68	mm
Number of Dots	160 x 160	dots
Dot Pitch (W x H)	0.265 x 0.265	mm
Dot Size (W x H)	0.245 x 0.245	mm

ABSOLUTE MAXIMUM RATINGS

PARAMETER	SYMBOL	MIN.	MAX.	UNIT
Supply Voltage Logic	V_{DD} (V_{DD} - V_{SS})	-0.3	7.0	V
Supply Voltage Drive	V_{DD} - V_{EE}	-0.3	30.0	V
Input Voltage	V_{IN}	-0.3	V_{DD} +0.3	V
Operating Temperature	See page 8			
Storage Temperature				

PIN CONFIGURATION

PIN	SYMBOL	SIGNAL DESCRIPTION
1	V_5	Bais Voltage Non-Select (Common Driver)
2	V_2	Bias Voltage Non-Select (Common Driver)
3	V_{EE}	Power Supply Voltage for LCD (+V)
4	V_{DD}	Power Supply for Logic
5	FRAME	Frame Start Signal (First Line Mark of Common Signal)
6	GND	Ground
7	LOAD	Latch Pulse of Display Data
8	V_{SS}	Power Supply (0V)
9	M	Switch Signal to Convert LCD Drive Wave From Into AC
10	/DISPOFF	H: Display On, L: Display Off
11	CP	Clock Pules for Segment Shift Register
12	V_4	Bais Voltage Non-Select (Segment Driver)
13	V_3	Bais Voltage Non-Select (Segment Driver)
14	DB_3	Display Data
15	DB_2	Display Data
16	DB_1	Display Data
17	DB_0	Display Data
18	NC	No Connection
19	EL_1	Power Supply for the EL_1
20	EL_2	Power Supply for the EL_2
21	BOTTOM	Touch Panel Pin
22	RIGHT	Touch Panel Pin
23	TOP	Touch Panel Pin
24	LEFT	Touch Panel Pin

BLOCK DIAGRAM

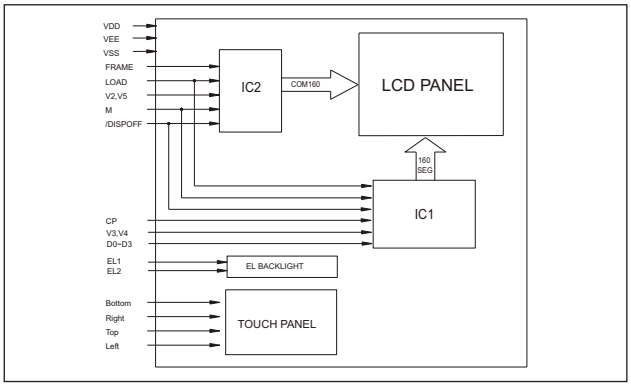

digital electronic gmbh • Tel. +49 (0) 8221/708-0 Fax. +49 (0) 8221/708-80

All specifications subject to change without notice.

STANDARD COF MODULES

YMS 160160-01

160 X 160 DOTS, 1/160 DUTY, 1/13 BIAS

ELECTRICAL CHARACTERISTICS, Ta = 25°C

ITEM		SYMBOL	CONDITION	SPEC. VALUE			UNIT
				MIN.	TYP.	MAX.	
Supply Voltage (Logic)		V_{DD} - V_{SS}			18.6		V
Supply Current (Logic)		I_{DD}	V_{DD} =5V		3.0	4.5	mA
Input Voltage	HIGH	V_{IH}		0.7 V_{DD}		V_{DD}	V
	LOW	V_{IL}		0		0.3 V_{DD}	V
Output Voltage	HIGH	V_{OH}	I_{OH}=0.205mA	2.4			V
	LOW	V_{OL}	I_{OL} =1.6mA			0.4	V
LCD Operating Voltage		V_{DD} - V_{EE}	V_{DD} =5V Ta=+25°C		9.0		V
Supply Current LCD Drive		I_{EE}			0.8	1.0	mA

Note (1): Value is high reliability type. Note (2): Electro-Optical Characteristics: See page 5.

INTERFACE TIMING CHARACTERISTICS

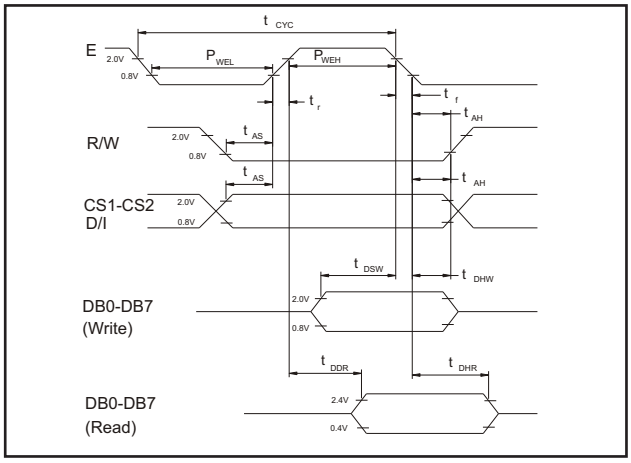

PARAMETER	SYMBOL	MIN.	MAX.	UNIT
E Cycle Time	t_{CYC}	1000		ns
E High Level Width	t_{WEH}	450		ns
E Low Level Width	t_{WEL}	450		ns
E Rise Time	t_R		25	ns
E Fall Time	t_F		25	ns
Address Setup Time	t_{AS}	140		ns
Address Hold Time	t_{AH}	10		ns
Data Setup Time	t_{DSW}	200		ns
Data Delay Time	t_{DDR}		320	
Data Delay Time - Write	t_{DHW}	10		ns
Data Hold Time - Read	t_{DHR}	20		ns

Condition: V_{DD}=+5.0V ±10%, V_{SS}=0V, Ta=+25°C

STANDARD TAB MODULES

YMS 160160-02

160 X 160 DOTS, 1/160 DUTY, 1/13 BIAS

EXTERNAL DIMENSION AND DISPLAY PATTERN

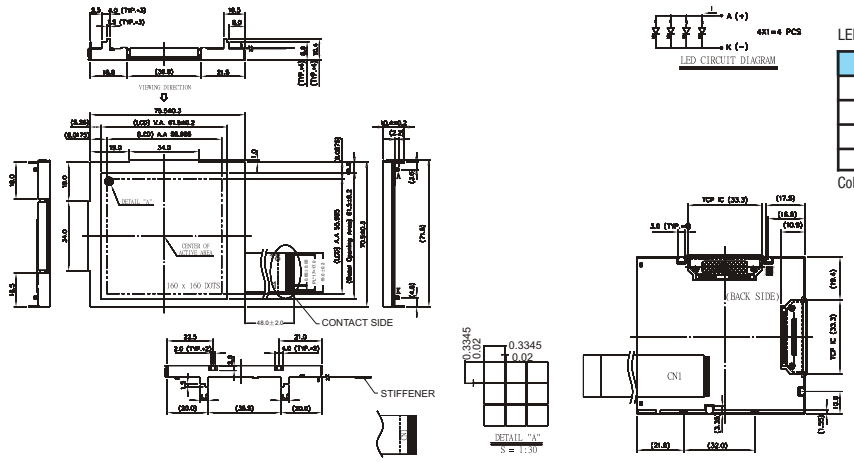

LED Backlight Specification:

ITEM	SYMBOL	MIN.	TYP.	MAX.	UNIT
AVG.X OF 1931 C.I.E.	X	0.28	0.31	0.34	
AVG.X OF 1931 C.I.E.	Y	0.28	0.31	0.34	
Forward Current	I_{AK}			80	mA
Forward Voltage	V_{AK}		5.0		V

Color: White

MECHANICAL DATA

ITEM	SPECIFICATION	UNIT
Module Size (W x H x T)	75.5 x 70.5 x 10.4	mm
Viewing Area (W x H)	61.5 x 61.5	mm
Number of Dots	160 x 160	dots
Dot Pitch (W x H)	0.3545 x 0.3545	mm
Dot Size (W x H)	0.3345 x 0.3345	mm

ABSOLUTE MAXIMUM RATINGS

PARAMETER	SYMBOL	MIN.	MAX.	UNIT
Supply Voltage Logic	V_{DD} - V_{SS}	-0.3	7.0	V
Supply Voltage Drive	V_{DD} - V_{EE}	-0.3	30.0	V
Input Voltage	V_{IN}	-0.3	V_{DD} +0.3	V
Operating Temperature	See page 8			
Storage Temperature				

PIN CONFIGURATION

PIN	SYMBOL	SIGNAL DESCRIPTION
1	V_{SS}	Power Supply (0V)
2	FLM (EI_{02})	First Line Mark for Common Scan
3	CL_1 (LP) V_0	H → L Data Latch Pulse
4	CL_2 (XCK)	Clock Pulse for Segment Shift Register
5	M (FR)	H/L Frame Reverse Signal
6	V_{DD}	H/L Supply for Logic (+3.3V)
7	NC	No Connection
8	V_{EE}	Power Supply for LCD
9-12	D_3-D_0	H/L Display Data
13-16	NC	No Connection
17	A	Power Supply for LED Backlight
18	K	Power Supply for LED Backlight

BLOCK DIAGRAM

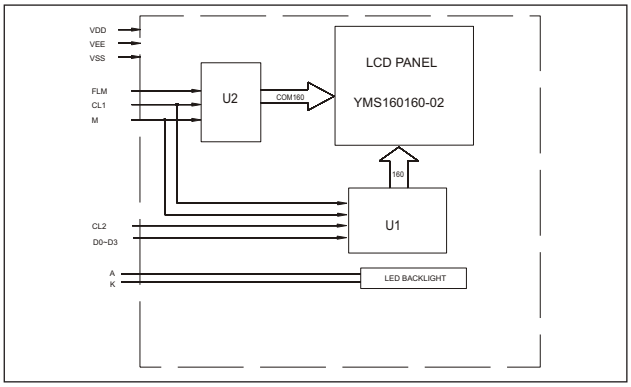

BACKLIGHTING CHARACTERISTICS, Ta = 25°C, LED

ITEM	SYMBOL	CONDITION	SPEC. VALUE			UNIT
			MIN.	TYP.	MAX.	
Supply Voltage	IF	VF=5.0V		80	120	V
Power Consumption	P_{LED}			400	600	Hz
Luminous			390		405	cd/m²

ELECTRICAL CHARACTERISTICS, Ta = 25°C

ITEM		SYMBOL	CONDITION	SPEC. VALUE			UNIT
				MIN.	TYP.	MAX.	
Supply Voltage (Logic)		V_{DD} - V_{SS}		2.5		5.5	V
Supply Current (Logic)		I_{DD}	V_{DD} =3.3V		1.5	2.5	mA
Input Voltage	HIGH	V_{IH}		0.8 V_{DD}			V
	LOW	V_{IL}				0.2 V_{DD}	V
Output Voltage	HIGH	V_{OH}		V_{DD} -0.4			V
	LOW	V_{OL}				0.4	V
LCD Operating Voltage		V_{DD} - V_{EE}	V_{DD} =3.3V Ta=+25°C		20.0		V
Supply Current LCD Drive		I_{EE}			0.8	1.0	mA

Note (1): Value is high reliability type. Note (2): Electro-Optical Characteristics: See page 5.

digital electronic gmbh • Tel. +49 (0) 8221/708-0 Fax. +49 (0) 8221/708-80

All specifications subject to change without notice.

STANDARD TAB MODULES

YMS 160160-02

160 X 160 DOTS, 1/160 DUTY, 1/13 BIAS

TIMING WAVEFORM OF SEGMENT MODE

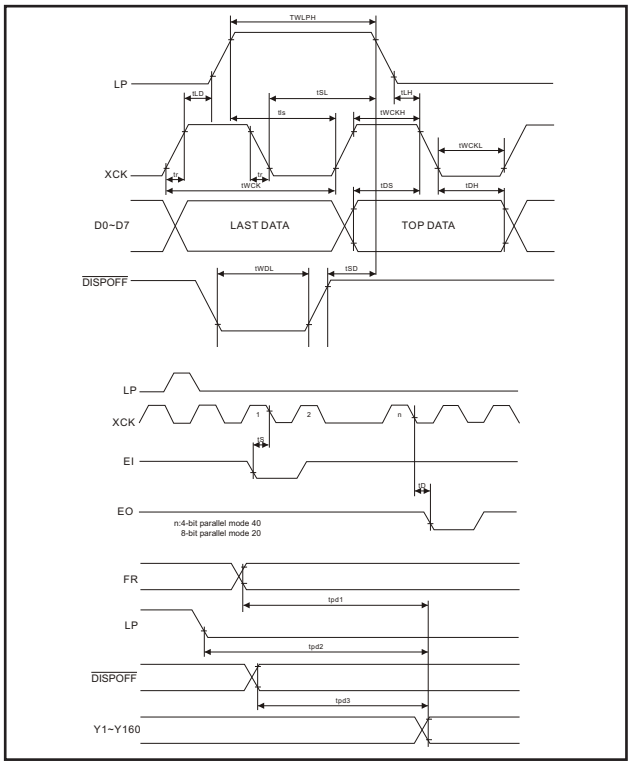

SEGMENT MODE

V_{SS}=0V, V_{DD}=2.5~4.5, V_0=15 to 30 and Ta=-20°C to +85°C, unless othewise noted.

PARAMETER	SYMBOL	MIN.	TYP.	MAX.	UNIT	CONDITION
Shift Clock Period	t_{WCK}	125			ns	tr, tr≤11ns Note 1
Shift Clock „H“ Pulse Width	t_{WCKH}	51			ns	
Shift Clock „L“ Pulse Width	t_{WCKL}	51			ns	
Data Setup Time	t_{DS}	30			ns	
Data Hole Time	t_{DH}	40			ns	
Latch Pulse „H“ Pulse Width	t_{WLPH}	51			ns	
Shift Clock Rise to Latch Pulse Rise Time	t_{LD}	0			ns	
Shift Clock Fall to Latch Pulse Fall Time	t_{SL}	51			ns	
Latch Pulse Rise to Shift Clock Rise Time	t_{LS}	51			ns	
Latch Pulse Fall to Shift Clock Fall Time	t_{LH}	51			ns	
Input Signal Rise Time	t_r			50	ns	Note 2
Input Signal Fall Time	t_f			50	ns	Note 2
Enable Setup Time	t_S	36			ns	
/DISPOFF Remoal Time	t_{SD}	100			ns	
/DISPOFF Enable Pulse Width	t_{WDL}	1.2			ns	
Output Delay Time (1)	t_D			78	ns	C_L=15pF
Output Delay Time (2)	t_{pd1}, t_{pd2}			1.2	µ s	C_L=15pF
Output Delay Time (3)	t_{pd3}			1.2	µ s	C_L=15pF

TIMING CHARACTERISTICS OF COMMON MODE

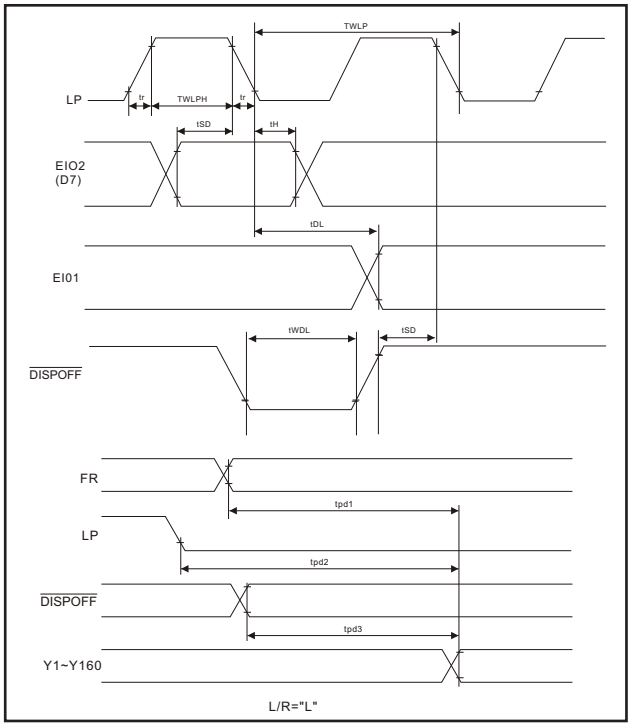

COMMON MODE

V_{SS}=0V, V_{DD}=2.5~5.5, V_0=15 to 30 and Ta=-20°C to +85°C, unless othewise noted.

PARAMETER	SYMBOL	MIN.	TYP.	MAX.	UNIT	CONDITION
Shift Clock Period	t_{WLP}	250			ns	tr, tr≤20ns Note 1
Shift Clock „H“ Pulse Width	t_{WLPH}	15			ns	V_{DD}=+5.0V +/-10%
		30			ns	V_{DD}=+2.5 ~+4.5V
Data Setup Time	t_{SU}	30			ns	
Data Hole Time	t_H	50			ns	
Input Signal Rise Time	t_r			50	ns	
Input Signal Fall Time	t_f			50	ns	
/DISPOFF Remoal Time	t_{SD}	100			ns	
/DISPOFF Enable Pulse Width	t_{WDL}	1.2			ns	
Output Delay Time (1)	t_D			200	ns	C_L=15pF
Output Delay Time (2)	t_{pd1}, t_{pd2}			1.2	µ s	C_L=15pF
Output Delay Time (3)	t_{pd3}			1.2	µ s	C_L=15pF

STANDARD COG MODULES

YMC 240128-13

240 X 128 DOTS, 1/128 DUTY, 1/12 BIAS

EXTERNAL DIMENSION AND DISPLAY PATTERN

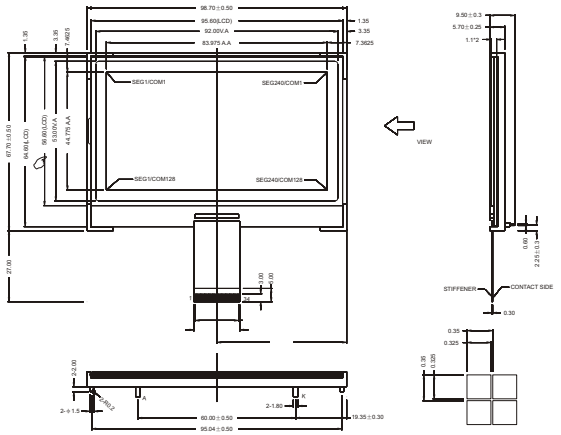

MECHANICAL DATA

ITEM	SPECIFICATION	UNIT
Module Size (W x H x T)	98.7 x 67.7 x 9.5	mm
Viewing Area (W x H)	92.0 x 53.0	mm
Number of Dots	240 x 128	dots
Dot Pitch (W x H)	0.35x 0.35	mm
Dot Size (W x H)	0.325 x 0.325	mm

ABSOLUTE MAXIMUM RATINGS

PARAMETER	SYMBOL	MIN.	MAX.	UNIT
Supply Voltage Logic	V_{DD} (V_{DD} - V_{SS})	-0.5	4.0	V
Supply Voltage Drive	V_{DD} - V_{EE}	-0.5	20.0	V
Input Voltage	V_{IN}	-0.5	V_{DD} +0.3	V
Operating Temperature	See page 8			
Storage Temperature				

PIN CONFIGURATION

PIN	SYMBOL	SIGNAL DESCRIPTION
1-6	V_{0IN}, V_{0OUT}, V_1, V_2, V_3, V_4	LCD Driving Supply Voltage
7	V_{OUT}	Chip´s Power Supply Pin
8	C_{6P}	Connection Pin for Voltage Converter
9	C_{2N}	Connection Pin for Voltage Converter
10	C_{4P}	Connection Pin for Voltage Converter
11	C_{2N}	Connection Pin for Voltage Converter
12	C_{2P}	Connection Pin for Voltage Converter
13	C_{1P}	Connection Pin for Voltage Converter
14	C_{1N}	Connection Pin for Voltage Converter
15	C_{3P}	Connection Pin for Voltage Converter
16	C_{5P}	Connection Pin for Voltage Converter
17	C_{1N}	Connection Pin for Voltage Converter
18	C_{7P}	Connection Pin for Voltage Converter
19	V_{DDA}	Chip´s Power Supply Pin
20	V_{SS}	Ground
21	V_{DD}	Chip´s Power Supply Pin
22	XCS	Chip Select Input Pin
23	RES	Reset Input Pin
24	E	Read / Write Execution Control
25-32	D_7-D_0	The 8-bit Bi-Directional Data Bus to be connected to the MCU in Prallel Interface Mode
33	R/W	Read / Write Execution Control
34	A_0	Identify the Data or a Command

digital electronic gmbh • Tel. +49 (0) 8221/708-0 Fax. +49 (0) 8221/708-80

All specifications subject to change without notice.

STANDARD COG MODULES

YMC 240128-13

240 X 128 DOTS, 1/128 DUTY, 1/12 BIAS

ELECTRICAL CHARACTERISTICS, Ta = 25°C

ITEM		SYMBOL	CONDITION	SPEC. VALUE			UNIT
				MIN.	TYP.	MAX.	
Supply Voltage (Logic)		V_{DD} - V_{SS}		2.4	3.3	3.3	V
Supply Current (Logic)		I_{DD}	V_{DD} =3.3V			1.6	mA
Input Voltage	HIGH	V_{IH}		0.7 V_{DD}		V_{DD}	V
	LOW	V_{IL}		V_{SS}		0.3 V_{DD}	V
Output Voltage	HIGH	V_{OH}		0.5			V
	LOW	V_{OL}				-0.5	V
LCD Operating Voltage		V_{DD} - V_{EE}	V_{DD} =3.3V Ta=+25°C		13.5	18	V
Supply Current LCD Drive		I_{EE}				1.3	mA

Note (1): Value is high reliability type. Note (2): Electro-Optical Characteristics: See page 5.

BACKLIGHTING CHARACTERISTICS, Ta = 25°C, LED

ITEM	SYMBOL	CONDITION	SPEC. VALUE			UNIT
			MIN.	TYP.	MAX.	
Forward Current	IF	V_F= 3.8V		90	120	mA
Power Consumption	P_{LED}			342		mW
Luminous	I_V	V_F= 3.8V	70			cd/m^2

AC CHARACTERISTICS

System Bus Read / Write Chracteristics (for the 6800 Series MPU)

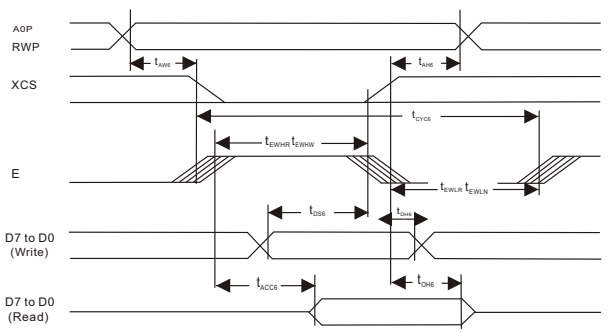

PARAMETER	SIGNAL	SYMBOL	CONDITION	MIN.	MAX.	UNIT
Address Hold Time	A0	t_{AH6}		20		ns
Address Setup Time		t_{AW6}		20		ns
System Cycle Time		t_{CYC6}		200		ns
Enable LPulse Width Write	WR	t_{CCLW}		100		ns
		t_{CCLR}		100		ns
Enable H Pulse Width Read	RD	t_{CCHW}		100		ns
		t_{CCHR}		100		ns
Write Data Setup Time	D_0 to D_7	t_{DS6}		150		ns
Write Data Hold Time		t_{DH6}		20		ns
Read Access Time		t_{ACC6}	C_L=100pF		40	ns
Read Output Disable Time		t_{CH6}	C_L=100pF		30	ns

Condition: V_{DD}=+3.3V, Ta=-30°C to +85°C, Die)

STANDARD TAB MODULES

YMS 320240-10

320 X 240 DOTS, 1/240 DUTY, 1/13 BIAS

EXTERNAL DIMENSION AND DISPLAY PATTERN

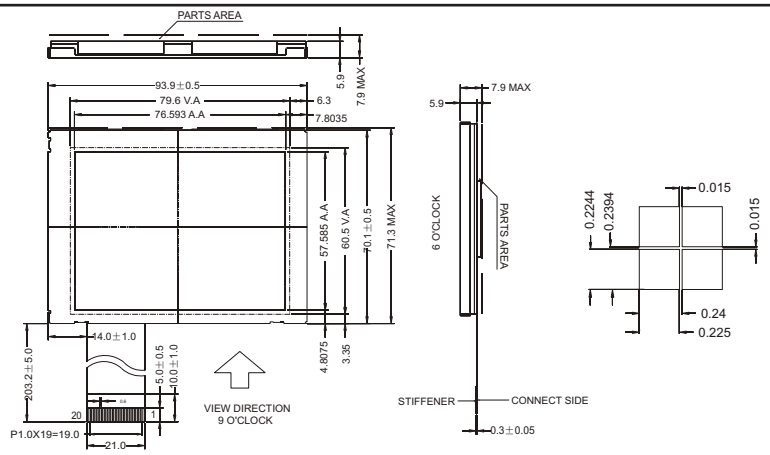

MECHANICAL DATA

ITEM	SPECIFICATION	UNIT
Module Size (W x H x T)	93.9 x 71.3 x 7.9	mm
Viewing Area (W x H)	79.6 x 60.5	mm
Number of Dots	320 x 240	dots
Dot Pitch (W x H)	0.24 x 0.2394	mm
Dot Size (W x H)	0.225 x 0.2244	mm

ABSOLUTE MAXIMUM RATINGS

PARAMETER	SYMBOL	MIN.	MAX.	UNIT
Supply Voltage Logic	V_{DD} - V_{SS}	-0.3	7.0	V
Supply Voltage Drive	V_{DD} - V_{EE}	0	30.0	V
Input Voltage	V_{IN}	-0.3	V_{DD} +0.3	V
Operating Temperature	See page 8			
Storage Temperature				

PIN CONFIGURATION

PIN	SYMBOL	SIGNAL DESCRIPTION
1	V_{DD}	Power Supply for Logic
2	S.GND	Ground
3	V_{LCD}	Power Supply Pin for LCD Driver Voltage
4	FLM	Frame Signal
5	DISP.OFF	Control Input Pin for Output Deselect Level
6	M	H/L Supply for Logic (+3.3V)
7	LP	No Connection
8	XCK	Power Supply for LCD
9	V_{SS}	Ground
10-13	D_3-D_0	Display Data Input
14	V_{SS}	Ground
15,16	LED+, LED-	Power Supply Terminal for Driving LED Backlight
17-20	NC	No Connection

BLOCK DIAGRAM

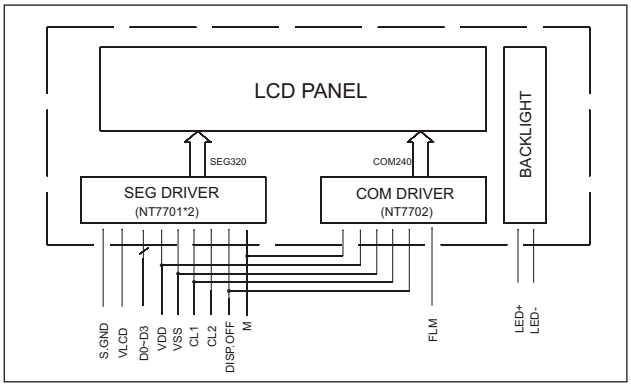

BACKLIGHTING CHARACTERISTICS, Ta=25°C, LED

ITEM	SYMBOL	CONDITION	SPEC. VALUE			UNIT
			MIN.	TYP.	MAX.	
Forward Current	VF	IF=70 mA	3.0	3.2	3.3	V
Power Consumption	P_{LED}			224		mW
Luminous						cd/m²

ELECTRICAL CHARACTERISTICS, Ta=25°C

ITEM		SYMBOL	CONDITION	SPEC. VALUE			UNIT
				MIN.	TYP.	MAX.	
Supply Voltage (Logic)		V_{DD} - V_{SS}		2.5	3.3	5.5	V
Supply Current (Logic)		I_{DD}	V_{DD} =3.3V			2.0	mA
Input Voltage	HIGH	V_{IH}		0.8 V_{DD}			V
	LOW	V_{IL}				0.2 V_{DD}	V
Output Voltage	HIGH	V_{OH}		V_{DD} -0.4			V
	LOW	V_{OL}				0.4	V
LCD Operating Voltage		V_{DD} - V_{EE}	V_{DD} =3.3V Ta=+25°C		22.7		V
Supply Current LCD Drive		I_{EE}				1.8	mA

Note (1): Value is high reliability type. Note (2): Electro-Optical Characteristics: See page 5.

digital electronic gmbh • Tel. +49 (0) 8221/708-0 Fax. +49 (0) 8221/708-80

All specifications subject to change without notice.

STANDARD TAB MODULES

YMS 320240-10

320 X 240 DOTS, 1/240 DUTY, 1/13 BIAS

TIMING WAVEFORM OF SEGMENT MODE

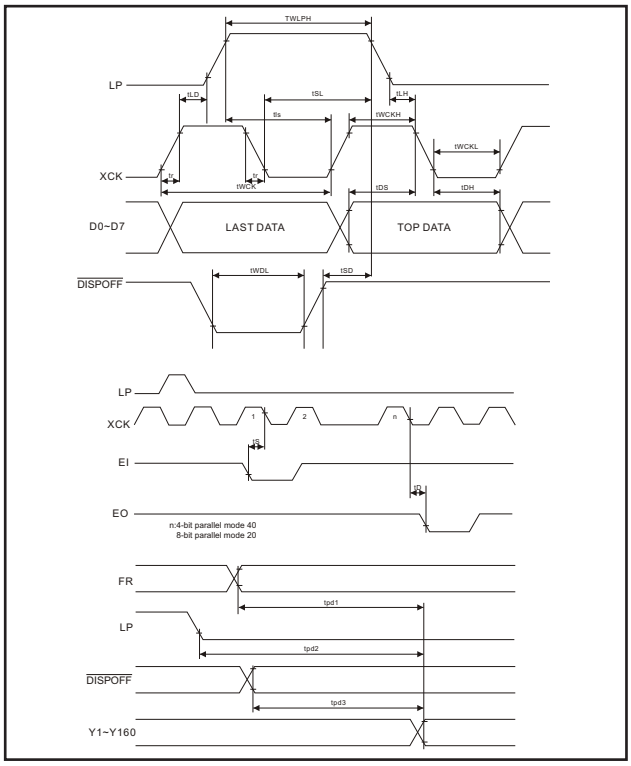

SEGMENT MODE

V_{SS}=0V, V_{DD}=2.5~4.5V, V_0=15 to 30V, Ta=-20°C to +85°C, unless othewise noted.

PARAMETER	SYMBOL	MIN.	TYP.	MAX.	UNIT	CONDITION
Shift Clock Period	t_{WCK}	125			ns	tr, tr≤11ns Note 1
Shift Clock „H“ Pulse Width	t_{WCKH}	51			ns	
Shift Clock „L“ Pulse Width	t_{WCKL}	51			ns	
Data Setup Time	t_{DS}	30			ns	
Data Hole Time	t_{DH}	40			ns	
Latch Pulse „H“ Pulse Width	t_{WLPH}	51			ns	
Shift Clock Rise to Latch Pulse Rise Time	t_{LD}	0			ns	
Shift Clock Fall to Latch Pulse Fall Time	t_{SL}	51			ns	
Latch Pulse Rise to Shift Clock Rise Time	t_{LS}	51			ns	
Latch Pulse Fall to Shift Clock Fall Time	t_{LH}	51			ns	
Input Signal Rise Time	t_r			50	ns	Note 2
Input Signal Fall Time	t_f			50	ns	Note 2
Enable Setup Time	t_S	36			ns	
/DISPOFF Remoal Time	t_{SD}	100			ns	
/DISPOFF Enable Pulse Width	t_{WDL}	1.2			ns	
Output Delay Time (1)	t_D			78	ns	C_L=15pF
Output Delay Time (2)	t_{pd1}, t_{pd2}			1.2	µ s	C_L=15pF
Output Delay Time (3)	t_{pd3}			1.2	µ s	C_L=15pF

TIMING CHARACTERISTICS OF COMMON MODE

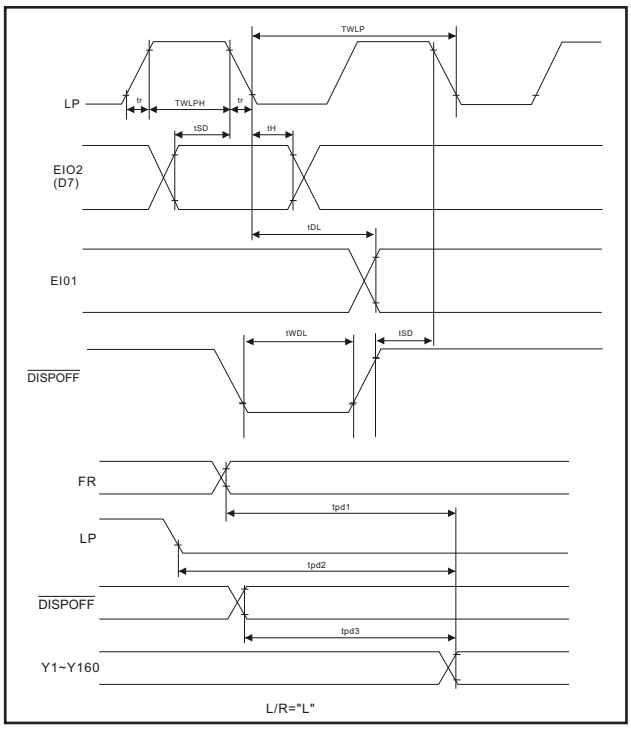

COMMON MODE

V_{SS}=0V, V_{DD}=2.5~5.5, V_0=15 to 30 and Ta=-20°C to +85°C, unless othewise noted.

PARAMETER	SYMBOL	MIN.	TYP.	MAX.	UNIT	CONDITION
Shift Clock Period	t_{WLP}	250			ns	tr, tr≤20ns Note 1
Shift Clock „H“ Pulse Width	t_{WLPH}	15			ns	V_{DD}=+5.0V +/-10%
		30			ns	V_{DD}=+2.5 ~+4.5V
Data Setup Time	t_{SU}	30			ns	
Data Hole Time	t_H	50			ns	
Input Signal Rise Time	t_r			50	ns	
Input Signal Fall Time	t_f			50	ns	
/DISPOFF Remoal Time	t_{SD}	100			ns	
/DISPOFF Enable Pulse Width	t_{WDL}	1.2			ns	
Output Delay Time (1)	t_D			200	ns	C_L=15pF
Output Delay Time (2)	t_{pd1}, t_{pd2}			1.2	µ s	C_L=15pF
Output Delay Time (3)	t_{pd3}			1.2	µ s	C_L=15pF

STANDARD TAB MODULES

YMS 320240-11

320 X 240 DOTS, 1/240 DUTY, 1/13 BIAS

EXTERNAL DIMENSION AND DISPLAY PATTERN

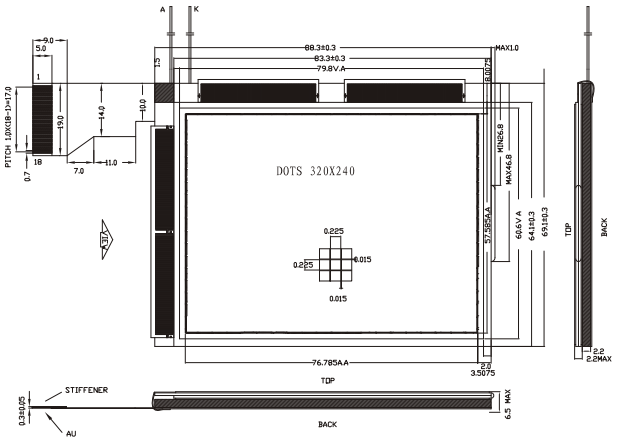

MECHANICAL DATA

ITEM	SPECIFICATION	UNIT
Module Size (W x H x T)	120.3 x 69.1 x 6.5	mm
Viewing Area (W x H)	79.8 x 60.6	mm
Number of Dots	320 x 240	dots
Dot Pitch (W x H)	0.240 x 0.240	mm
Dot Size (W x H)	0.225 x 0.225	mm

ABSOLUTE MAXIMUM RATINGS

PARAMETER	SYMBOL	MIN.	MAX.	UNIT
Supply Voltage Logic	V_{DD} - V_{SS}	-0.3	7.0	V
Supply Voltage Drive	V_{DD} - V_{EE}	-0.3	30.0	V
Input Voltage	V_{IN}	-0.3	V_{DD} +0.3	V
Operating Temperature	See page 8			
Storage Temperature				

PIN CONFIGURATION

PIN	SYMBOL	SIGNAL DESCRIPTION
1-6	V_{LCD} (V_1), V_6, V_3, V_4, V_5, GND (V_2)	Power Supply Pin for LCD Driver Voltage
7	GND	Ground
8	V_{DD}	Power Supply
9	FLM	Frame Signal
10	CL_2	Display Dta Shift Clock Input for Segment Mode
11	M	AC Signal
12	CL_1	Latch Pulse Input / Shift Clock Input for the Shift Register
13	/DOFF	Control Input for Output Deselect Level
14	GND	Ground
15-18	D_3-D_0	Display Data

ELECTRICAL CHARACTERISTICS, Ta=25°C

ITEM		SYMBOL	CONDITION	SPEC. VALUE			UNIT
				MIN.	TYP.	MAX.	
Supply Voltage (Logic)		V_{DD} - V_{SS}		2.5	3.0	5.5	V
Supply Current (Logic)		I_{DD}	V_{DD} =3.0V			2.0	mA
Input Voltage	HIGH	V_{IH}		0.8 V_{DD}			V
	LOW	V_{IL}				0.2 V_{DD}	V
Output Voltage	HIGH	V_{OH}		V_{DD} -0.4			V
	LOW	V_{OL}				0.4	V
LCD Operating Voltage		V_{DD} - V_{EE}	V_{DD} =3.0V Ta=+25°C		22.0		V
Supply Current LCD Drive		I_{EE}				1.5	mA

Note (1): Value is high reliability type.

Note (2): Electro-Optical Characteristics: See page 5.

BACKLIGHTING CHARACTERISTICS, Ta=25°C, LED

ITEM	SYMBOL	CONDITION	SPEC. VALUE			UNIT
			MIN.	TYP.	MAX.	
Forward Current	VF	IF=60 mA	2.9	3.0	3.1	V
Power Consumption	P_{LED}			180		mW
Luminous				TBD		cd/m²

digital electronic gmbh • Tel. +49 (0) 8221/708-0 Fax. +49 (0) 8221/708-80

All specifications subject to change without notice.

STANDARD TAB MODULES

YMS 320240-11

320 X 240 DOTS, 1/240 DUTY, 1/13 BIAS

TIMING WAVEFORM OF SEGMENT MODE

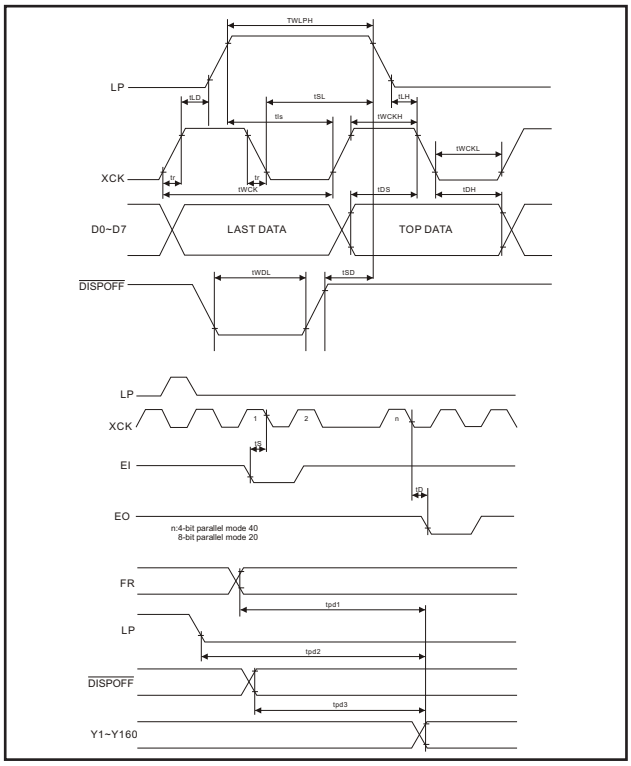

SEGMENT MODE

V_{SS}=0V, V_{DD}=2.5~4.5V, V_0=15 to 30V, Ta=-20°C to +85°C, unless othewise noted.

PARAMETER	SYMBOL	MIN.	TYP.	MAX.	UNIT	CONDITION
Shift Clock Period	t_{WCK}	125			ns	tr, tr≤11ns Note 1
Shift Clock „H" Pulse Width	t_{WCKH}	51			ns	
Shift Clock „L" Pulse Width	t_{WCKL}	51			ns	
Data Setup Time	t_{DS}	30			ns	
Data Hole Time	t_{DH}	40			ns	
Latch Pulse „H" Pulse Width	t_{WLPH}	51			ns	
Shift Clock Rise to Latch Pulse Rise Time	t_{LD}	0			ns	
Shift Clock Fall to Latch Pulse Fall Time	t_{SL}	51			ns	
Latch Pulse Rise to Shift Clock Rise Time	t_{LS}	51			ns	
Latch Pulse Fall to Shift Clock Fall Time	t_{LH}	51			ns	
Input Signal Rise Time	t_r			50	ns	Note 2
Input Signal Fall Time	t_f			50	ns	Note 2
Enable Setup Time	t_S	36			ns	
/DISPOFF Remoal Time	t_{SD}	100			ns	
/DISPOFF Enable Pulse Width	t_{WDL}	1.2			ns	
Output Delay Time (1)	t_D			78	ns	C_L=15pF
Output Delay Time (2)	t_{pd1}, t_{pd2}			1.2	µ s	C_L=15pF
Output Delay Time (3)	t_{pd3}			1.2	µ s	C_L=15pF

TIMING CHARACTERISTICS OF COMMON MODE

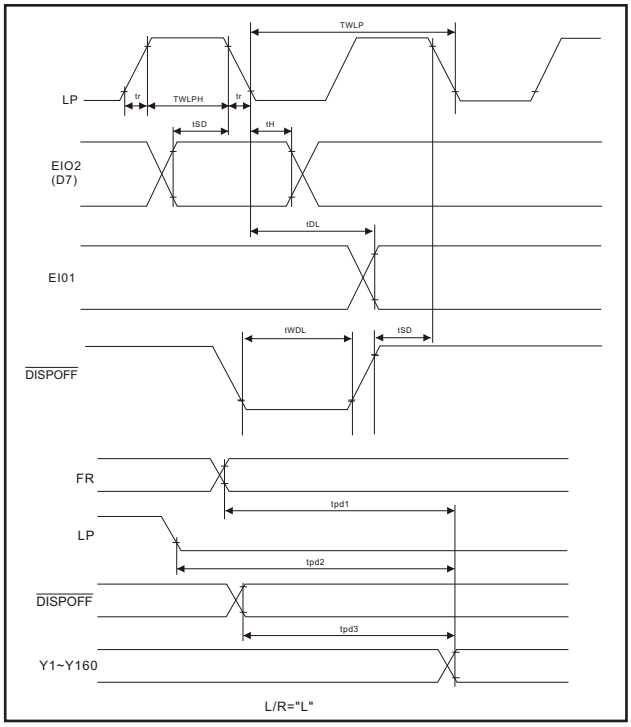

COMMON MODE

V_{SS}=0V, V_{DD}=2.5~5.5, V_0=15 to 30 and Ta=-20°C to +85°C, unless othewise noted.

PARAMETER	SYMBOL	MIN.	TYP.	MAX.	UNIT	CONDITION
Shift Clock Period	t_{WLP}	250			ns	tr, tr≤20ns Note 1
Shift Clock „H" Pulse Width	t_{WLPH}	15			ns	V_{DD}=+5.0V +/-10%
		30			ns	V_{DD}=+2.5 ~+4.5V
Data Setup Time	t_{SU}	30			ns	
Data Hole Time	t_H	50			ns	
Input Signal Rise Time	t_r			50	ns	
Input Signal Fall Time	t_f			50	ns	
/DISPOFF Remoal Time	t_{SD}	100			ns	
/DISPOFF Enable Pulse Width	t_{WDL}	1.2			ns	
Output Delay Time (1)	t_D			200	ns	C_L=15pF
Output Delay Time (2)	t_{pd1}, t_{pd2}			1.2	µ s	C_L=15pF
Output Delay Time (3)	t_{pd3}			1.2	µ s	C_L=15pF

STANDARD TAB MODULES

YMS 320240-12

320 X 240 DOTS, 1/240 DUTY, 1/12 BIAS

EXTERNAL DIMENSION AND DISPLAY PATTERN

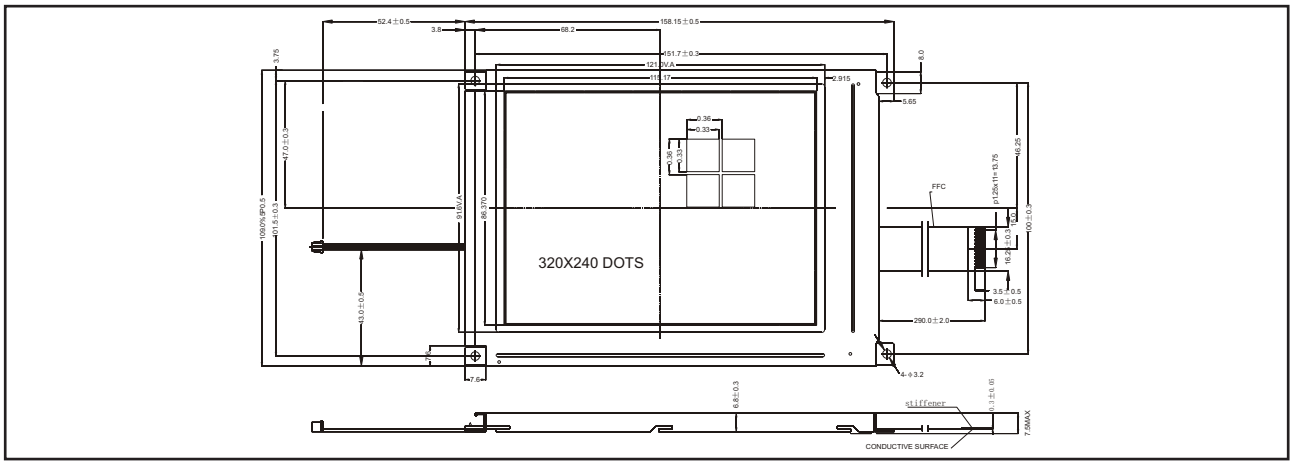

MECHANICAL DATA

ITEM	SPECIFICATION	UNIT
Module Size (W x H x T)	158.15 x 109.0 x 7.5	mm
Viewing Area (W x H)	121.0 x 91.6	mm
Number of Dots	320 x 240	dots
Dot Pitch (W x H)	0.33 x 0.36	mm
Dot Size (W x H)	0.33 x 0.33	mm

ABSOLUTE MAXIMUM RATINGS

PARAMETER	SYMBOL	MIN.	MAX.	UNIT
Supply Voltage Logic	V_{DD} - V_{SS}	-0.3	7.0	V
Supply Voltage Drive	V_{DD} - V_{EE}	-0.3	30.0	V
Input Voltage	V_{IN}	-0.3	V_{DD} +0.3	V
Operating Temperature	See page 8			
Storage Temperature				

PIN CONFIGURATION

PIN	SYMBOL	SIGNAL DESCRIPTION
1	S	Frame Signal
2	CP_1	Latch Pulse Input Pin for Display Data
3	CP_2	Clock Input Pin for Tking Display Data
4	NC	No Connection
5	DISP.OFF	Control Input Pin for Output Deselect Level
6-9	DB_0-DB_3	Data Bit 0 - Data Bit 3
10	V_{DD}	Power Supply for Logic
11	GND	Ground
12	V_{LCD}	Power Supply Pin for LCD Driver Voltage

BLOCK DIAGRAM

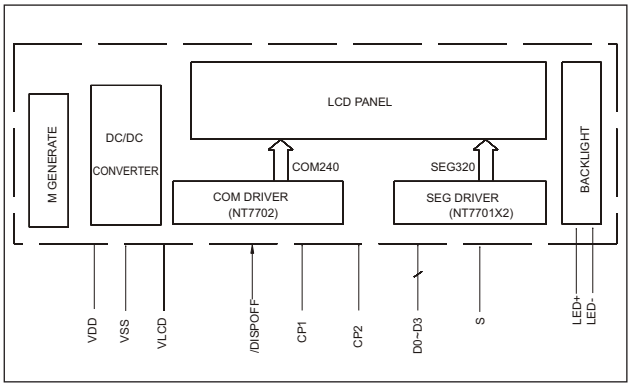

BACKLIGHTING CHARACTERISTICS, Ta = 25°C, LED

ITEM	SYMBOL	CONDITION	SPEC. VALUE			UNIT
			MIN.	TYP.	MAX.	
Forward Current	IF	VF=3.2V		120		mA
Power Consumption	P_{LED}			384		mW
Luminous				TBD		cd/m²

ELECTRICAL CHARACTERISTICS, Ta = 25°C

ITEM		SYMBOL	CONDITION	SPEC. VALUE			UNIT
				MIN.	TYP.	MAX.	
Supply Voltage (Logic)		V_{DD} - V_{SS}		2.5	5.0	5.5	V
Supply Current (Logic)		I_{DD}	V_{DD} =5.0V			2.0	mA
Input Voltage	HIGH	V_{IH}		0.8 V_{DD}			V
	LOW	V_{IL}				0.2 V_{DD}	V
Output Voltage	HIGH	V_{OH}		V_{DD} -0.4			V
	LOW	V_{OL}				0.4	V
LCD Operating Voltage		V_{DD} - V_{EE}	V_{DD} =5.0V Ta=+25°C		21.9		V
Supply Current LCD Drive		I_{EE}				1.4	mA

Note (1): Value is high reliability type. Note (2): Electro-Optical Characteristics: See page 5.

digital electronic gmbh • Tel. +49 (0) 8221/708-0 Fax. +49 (0) 8221/708-80

All specifications subject to change without notice.

STANDARD TAB MODULES

YMS 320240-12

320 X 240 DOTS, 1/240 DUTY, 1/12 BIAS

TIMING WAVEFORM OF SEGMENT MODE

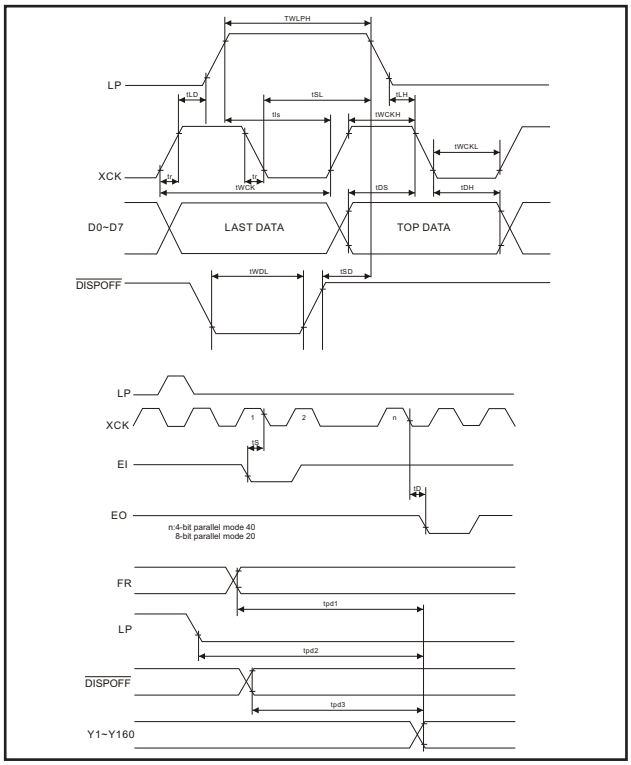

SEGMENT MODE

V_{SS}=0V, V_{DD}=2.5~4.5V, V_0=15 to 30V, Ta=-20°C to +85°C, unless othewise noted.

PARAMETER	SYMBOL	MIN.	TYP.	MAX.	UNIT	CONDITION
Shift Clock Period	t_{WCK}	71			ns	tr, tr≤11ns Note 1
Shift Clock „H" Pulse Width	t_{WCKH}	23			ns	
Shift Clock „L" Pulse Width	t_{WCKL}	23			ns	
Data Setup Time	t_{DS}	10			ns	
Data Hole Time	t_{DH}	20			ns	
Latch Pulse „H" Pulse Width	t_{WLPH}	23			ns	
Shift Clock Rise to Latch Pulse Rise Time	t_{LD}	0			ns	
Shift Clock Fall to Latch Pulse Fall Time	t_{SL}	25			ns	
Latch Pulse Rise to Shift Clock Rise Time	t_{LS}	25			ns	
Latch Pulse Fall to Shift Clock Fall Time	t_{LH}	25			ns	
Input Signal Rise Time	t_r			50	ns	Note 2
Input Signal Fall Time	t_f			50	ns	Note 2
Enable Setup Time	t_S	21			ns	
/DISPOFF Remoal Time	t_{SD}	100			ns	
/DISPOFF Enable Pulse Width	t_{WDL}	1.2			ns	
Output Delay Time (1)	t_D			40	ns	C_L=15pF
Output Delay Time (2)	t_{pd1}, t_{pd2}			1.2	µ s	C_L=15pF
Output Delay Time (3)	t_{pd3}			1.2	µ s	C_L=15pF

TIMING CHARACTERISTICS OF COMMON MODE

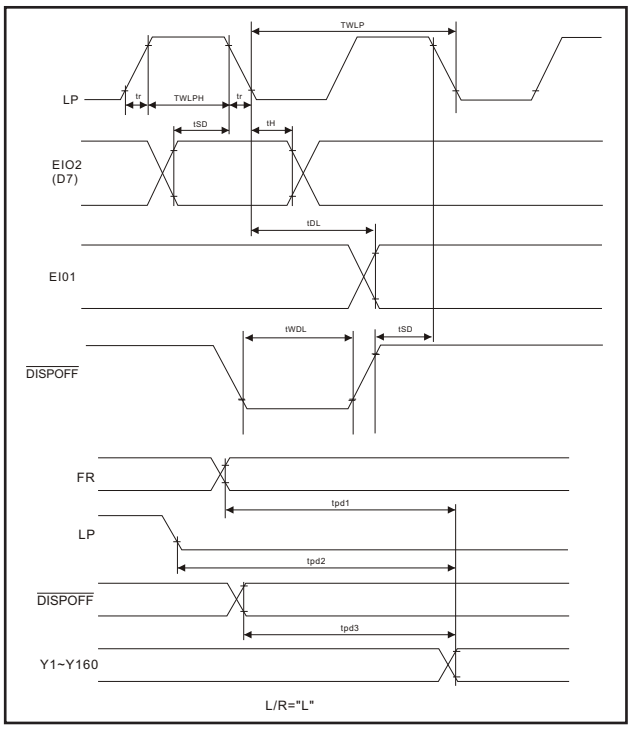

COMMON MODE

V_{SS}=0V, V_{DD}=2.5~5.5V, V_0=15 to 30V, Ta=-20°C to +85°C, unless othewise noted.

PARAMETER	SYMBOL	MIN.	TYP.	MAX.	UNIT	CONDITION
Shift Clock Period	t_{WLP}	250			ns	tr, tr≤20ns Note 1
Shift Clock „H" Pulse Width	t_{WLPH}	15			ns	V_{DD}=+5.0V +/-10%
		30			ns	V_{DD}=+2.5 ~+4.5V
Data Setup Time	t_{SU}	30			ns	
Data Hole Time	t_H	50			ns	
Input Signal Rise Time	t_r			50	ns	
Input Signal Fall Time	t_f			50	ns	
/DISPOFF Remoal Time	t_{SD}	100			ns	
/DISPOFF Enable Pulse Width	t_{WDL}	1.2			ns	
Output Delay Time (1)	t_D			200	ns	C_L=15pF
Output Delay Time (2)	t_{pd1}, t_{pd2}			1.2	µ s	C_L=15pF
Output Delay Time (3)	t_{pd3}			1.2	µ s	C_L=15pF

STANDARD TAB MODULES

YMS 320240-15

320 X 240 DOTS, 1/240 DUTY, 1/17 BIAS

EXTERNAL DIMENSION AND DISPLAY PATTERN

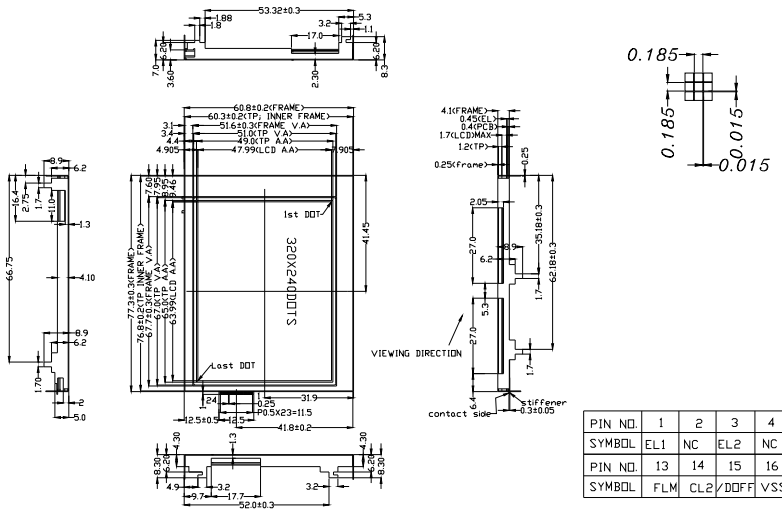

PIN NO.	1	2	3	4	5	6	7	8	9	10	11	12
SYMBOL	EL1	NC	EL2	NC	VCC	VCC	VLCD	VLCD	V0	VM	VSS	CL1
PIN NO.	13	14	15	16	17	18	19	20	21	22	23	24
SYMBOL	FLM	CL2	/DOFF	VSS	D3	D2	D1	D0	Y2	X2	Y1	X1

MECHANICAL DATA

ITEM	SPECIFICATION	UNIT
Module Size (W x H x T)	60.8 x 77.3 x 8.9	mm
Viewing Area (W x H)	51.6 x 67.7	mm
Number of Dots	320 x 240	dots
Dot Pitch (W x H)	0.2 x 0.2	mm
Dot Size (W x H)	0.185 x 0.185	mm

PIN CONFIGURATION

PIN	SYMBOL	SIGNAL DESCRIPTION
1	EL_1	EL Terminal (+)
2	NC	No Connection
3	EL_2	EL Terminal (-)
4	NC	No Connection
5	V_{CC}	Power Supply for Logic
6	V_{CC}	Power Supply for Logic
7	V_{LCD}	Power Supply for LCD
8	V_{LCD}	Power Supply for LCD
9	V_0	Bias Voltage for Non-Select (Segment Driver)
10	V_M	Bias Voltge for Non-Select (Segment Driver and Common Driver)
11	V_{SS}	Ground
12	CL_1	Latch Pulse of Display Data Shift Clock fo Common Driver
13	FLM	Frame Start Signal (Data Signal of the Shift Register of the Common Driver)
14	CL_2	Clock Pulse for Segment Shift Register
15	/DOFF	H: Display ON; L: Dispaly OFF
16	V_{SS}	Ground
17	D_3	Data Bus
18	D_2	Data Bus
19	D_1	Data Bus
20	D_0	Data Bus
21	Y_2	Terminal (Up Side of Vertical) for Touch Panel
22	X_2	Terminal (Right Side of Horizontal) for Touch Panel
23	Y_1	Terminal (Down Side of Vertical) for Touch Panel
24	X_1	Terminal (Left Side of Horizontal) for Touch Panel

ELECTRICAL CHARACTERISTICS, Ta = 25°C

ITEM		SYMBOL	CONDITION	SPEC. VALUE MIN.	TYP.	MAX.	UNIT
Supply Voltage (Logic)		V_{DD} - V_{SS}			3.3		V
LCD Operating Voltage		V_{LCD}	Ta=+25°C		21.6		V
Response Time		T_{ON} T_{OFF}			172 196		ms
Contrast		CR		2.0			
Viewing Angle	12H	θ1	CR ≥ 2.0		50		Deg.
	6H	θ2			65		
	3H	θ3			55		
	9H	θ4			55		

Note (1): Value is high reliability type.

Note (2): Electro-Optical Characteristics: See page 5.

BACKLIGHTING CHARACTERISTICS, Ta = 25°C, LED

ITEM	SYMBOL	CONDITION	SPEC. VALUE MIN.	TYP.	MAX.	UNIT
Voltage				110		V
Frequency				400		Hz

Color: Blue-Green

digital electronic gmbh • Tel. +49 (0) 8221/708-0 Fax. +49 (0) 8221/708-80

All specifications subject to change without notice.

STANDARD TAB MODULES

YMS 320240-15

320 X 240 DOTS, 1/240 DUTY, 1/17 BIAS

ABSOLUTE MAXIMUM RATINGS

PARAMETER	SYMBOL	MIN.	MAX.	UNIT
Supply Voltage Logic	V_{CC}	-0.3	7.0	V
Supply Voltage Drive	V_0	-0.3	7.0	V
Input Voltage 1 (Note1,2)	V_{T1}	-0.3	V_{DD} +0.3	V
Input Voltage 2 (Note 1,3,4)	V_{T2}	-0.3	V_{DD} +0.3	V
Operating Temperature	See page 8			
Storage Temperature				

Note (1): Potential from the GND.
Note (2): Applied to pins SHL, /EIO1, /EIO2, /DISP, D_0 to D_7, CL_1, CL_2, M, BS and MODE.
Note (3): Applied to VML, VMR, V1L and VMR. Operating the LSI in excess of the absolute maximum rating will result in permanent damage. Use the LSI observing electrical characteristic conditions in normal operation. Exceeding the conditions will cause malfunctions or will affect LSI reliability.
Note (4): Conform to the following turn-on/off sequence of the power nd signals. Otherwise, the LSI will mal-function or will be permanently damaged. In addition, LSI reliability will be affected.

BLOCK DIAGRAM, IST3031

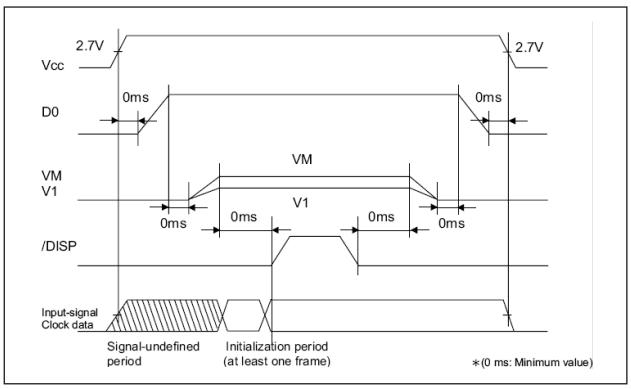

ABSOLUTE MAXIMUM RATINGS

PARAMETER	SYMBOL	MIN.	MAX.	UNIT
Supply Voltage Logic	V_{CC}	-0.3	7.0	V
Supply Voltage LCD Drive	V_{LCD}	-0.3	25.0	V
	V_{EE}	-20.0	0.3	V
Input Voltage 1 (Note1,2)	V_{T1}	-0.3	V_{DD} +0.3	V
Input Voltage 2 (Note 1,5,8)	V_H	-0.3	V_{DD} +0.3	V
Input Voltage 3 (Note 1,6,8)	V_L	-0.3	$+V_{EE}$	V
Input Voltage 4 (Note 1,6,8)	V_M	-0.3	5.0	V
Operating Temperature	See page 8			
Storage Temperature				

Note: If the LSI is used beyond the above maximum ratings, it may be permanently damaged. It should always be used within its specified operating range for normal operation to prevent malfunction or degraded reliability.
Note (1): The reference point is GND (0V).
Note (2): Applies to DIO_1, /DISP, SHL, M, NWS_0, NWS_1, NWS_2, NWS_3, NWS_4, RESET, $MODE_0$, $MODE_1$, CL, /M/S, AMP, CCL, $DIO_{2\sim3}$.
Note (3): Applies to V_{LCDL}, R pin.
Note (4): Applies to V_{HL}, R pin.
Note (5): Applies to V_{EEL}, R pin.
Note (6): Applies to V_{LL}, R pin.
Note (7): Applicable to ML, R pins (Caution). Operating the LSI in excess of the absolute mximum rating will result in permanent damage. Use the LSI observing electrical characteristic conditions in normal operation. Exceeding the conditions will cause malfunctions or will affect LSI reliability.
Note (8): Follow the sequence of activation and inactivation for the following power supplies and signals. And this sequence should be applied when using built-in switchung circuit. If the sequence is not followed, it may cuse LSI malfunction, permamnent damage, or adverse effects.

BLOCK DIAGRAM, IST3032

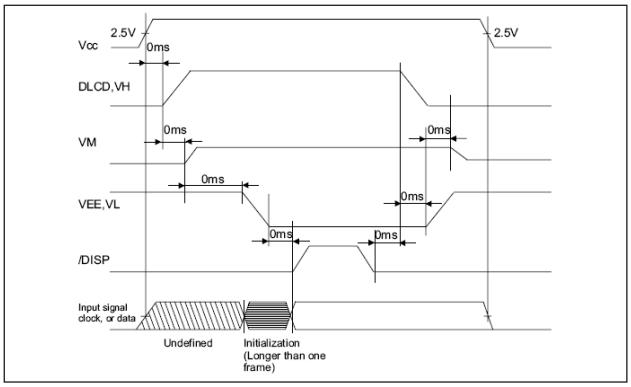

STANDARD TAB MODULES

YMS 320240-68

320 X 240 DOTS, 1/240 DUTY, 1/13 BIAS

EXTERNAL DIMENSION AND DISPLAY PATTERN

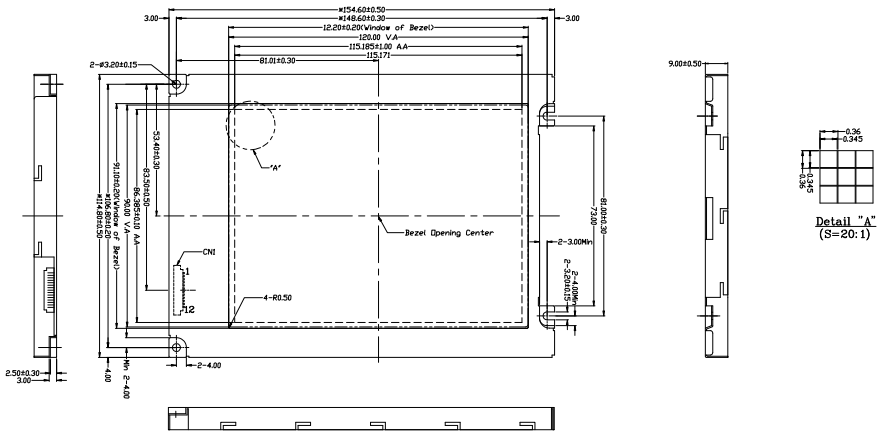

MECHANICAL DATA

ITEM	SPECIFICATION	UNIT
Module Size (W x H x T)	154.6 x 114.8 x 9.0	mm
Viewing Area (W x H)	120.0 x 90.0	mm
Number of Dots	320 x 240	dots
Dot Pitch (W x H)	0.36 x 0.36	mm
Dot Size (W x H)	0.345 x 0.345	mm

ABSOLUTE MAXIMUM RATINGS

PARAMETER	SYMBOL	MIN.	MAX.	UNIT
Supply Voltage 1	V_{DD}	-0.3	7.0	V
Supply Voltage 2: V_{OL}, V_{OR}	V_0	-0.3	40.0	V
Supply Voltage 2: V_{12L}, V_{12R}	V_{12}	-0.3	V_0 +0.3	V
Supply Voltage 2: V_{34L}, V_{34R}	V_{34}	-0.3	V_0 +0.3	V
Supply Voltage 2: V_{5L}, V_{5R}	V_5	-0.3	V_0 +0.3	V
Input Voltage: DI_0-DI_7, XCL, LP,FR, MD, S/C, EIO_1, EIO_2, /DISPOFF, $TEST_1$, $TEST_2$	V_I	-0.3	V_{DD} +0.3	V
Operating Temperature	See page 8			
Storage Temperature				

PIN CONFIGURATION

PIN	SYMBOL	SIGNAL DESCRIPTION
1	FLM	Scan Start-Up Signal
2	LP	Input Data Latch Signal
3	CP	Data Input Clock Signal
4	/DOSPOFF	Display Control Signal
5	V_{DD}	Power Supply for Logic
6	V_{SS}	Ground
7	V_{LCD}	Power Supply for LCD Drive
8	D_0	Display Data Signal
9	D_1	Display Data Signal
10	D_2	Display Data Signal
11	D_3	Display Data Signal
12	V_{SS}	Ground

BLOCK DIAGRAM

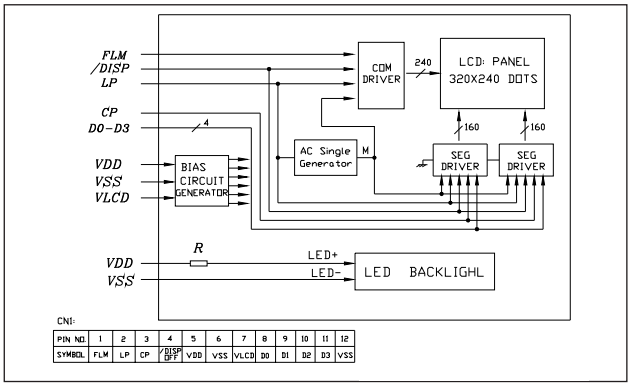

BACKLIGHTING CHARACTERISTICS, Ta=25°C, LED

ITEM	SYMBOL	CONDITION	SPEC. VALUE			UNIT
			MIN.	TYP.	MAX.	
Forward Voltage	V_f	I_F=300mA	2.9	3.2	3.5	V
Forward Current	I_F			300	375	mA
Power Dissipation	P_d	I_F=300mA			1.3125	W
Reverse Voltage	V_r				5.0	V
Reverse Current	I_r	V_r=5.0V			1.5	mA
Luminous Intensity	L_V	I_F=300mA	1000			cd/m²
Luminous Uniformity	ΔL_V	I_F=300mA	70			%
Chromaticity Coordinate	X	I_F=15mA each chip	0.27		0.32	
	Y		0.27		0.32	

Note (1): Operating Temperature Range T_{opr} -20°C to +70°C; Storage Temperature Range T_{stg} -30°C to +80°C.
Color: White. A Backlight is a kind of current device, it must connect a resistance for limiting current or it will be damaged.

ELECTRICAL CHARACTERISTICS, Ta=25°C

ITEM		SYMBOL	CONDITION	SPEC. VALUE			UNIT
				MIN.	TYP.	MAX.	
Supply Voltage (Logic)		V_{DD} - V_{SS}			5.0		V
LCD Operating Voltage		V_{LCD}	Ta=+25°C		20.0		V
Response Time		T_{ON} T_{OFF}			220 164		ms
Contrast		CR		2.0			
Viewing Angle	12H	θ1	CR ≥ 2.0		42		Deg.
	6H	θ2			55		
	3H	θ3			50		
	9H	θ4			50		

Note (2): Value is high reliability type.

Note (3): Electro-Optical Characteristics: See page 5.

digital electronic gmbh • Tel. +49 (0) 8221/708-0 Fax. +49 (0) 8221/708-80

All specifications subject to change without notice.

STANDARD TAB MODULES

YMS 320240-68

320 X 240 DOTS, 1/240 DUTY, 1/13 BIAS

AC CHRACTERISTICS, IST3225

Timing Characteristics (1)

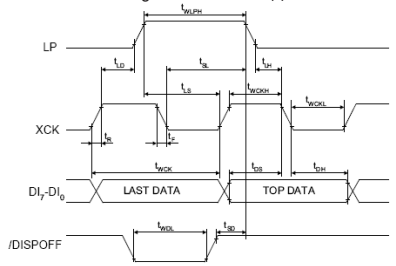

Timing Characteristics (2)

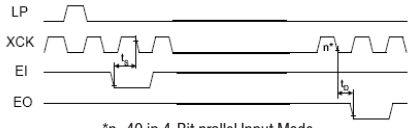

*n=40 in 4-Bit prallel Input Mode
n=20 in 8-Bit prallel Input Mode

Timing Characteristics (3)

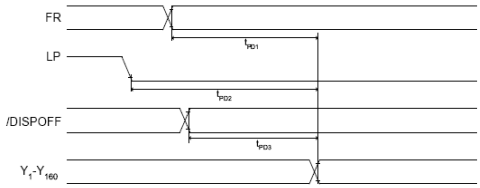

SEGMENT MODE

$V_{SS}=V_5=0V$, $V_{DD}=2.5$ to $5.5V$, $V_0=10$ to $40V$, $T_{OPR}=-30°C$ to $+85°C$.

PARAMETER	SYMBOL	MIN.	TYP.	MAX.	UNIT	CONDITION
Shift Clock Period	t_{WCK}	125			ns	t_r, $t_f \leq 11ns$ Note 1
Shift Clock „H“ Pulse Width	t_{WCKH}	51			ns	
Shift Clock „L“ Pulse Width	t_{WCKL}	51			ns	
Data Setup Time	t_{DS}	30			ns	
Data Hole Time	t_{DH}	40			ns	
Latch Pulse „H“ Pulse Width	t_{WLPH}	51			ns	
Shift Clock Rise to Latch Pulse Rise Time	t_{LD}	0			ns	
Shift Clock Fall to Latch Pulse Fall Time	t_{SL}	51			ns	
Latch Pulse Rise to Shift Clock Rise Time	t_{LS}	51			ns	
Latch Pulse Fall to Shift Clock Fall Time	t_{LH}	51			ns	
Input Signal Rise Time	t_r	36			ns	Note 2
Input Signal Fall Time	t_f			50	ns	Note 2
Enable Setup Time	t_S			50	ns	
/DISPOFF Remoal Time	t_{SD}	100			ns	
/DISPOFF Enable Pulse Width	t_{WDL}	1.2			ns	
Output Delay Time (1)	t_D			78	ns	$C_L=15pF$
Output Delay Time (2)	t_{pd1}, t_{pd2}			1.2	µ s	$C_L=15pF$
Output Delay Time (3)	t_{pd3}			1.2	µ s	$C_L=15pF$

Note (1): Takes the cascade connection into consideration. Note (2): $(t_{WCK}-(t_{WCKH}-(t_{WCKL})/2$ is maximum in the case of high speed operation.

AC CHARACTERISTICS, IST3226

Timing Chart of Common Mode

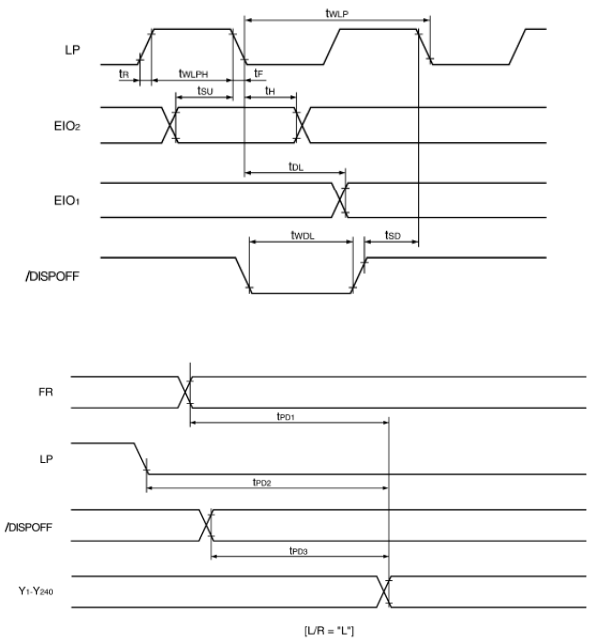

COMMON MODE

$V_{SS}=V_5=0V$, $V_{DD}=2.5$ to $5.5V$, $V_0=10$ to $40V$, $T_{OPR}=-30°C$ to $+85°C$.

PARAMETER	SYMBOL	MIN.	TYP.	MAX.	UNIT	CONDITION
Shift Clock Period	t_{WLP}	250			ns	t_r, $t_f \leq 20ns$ Note 1
Shift Clock „H“ Pulse Width	t_{WLPH}	15			ns	$V_{DD}=+5.0V$ +/-10%
		30			ns	$V_{DD}=+2.5$ ~+4.5V
Data Setup Time	t_{SU}	30			ns	
Data Hole Time	t_H	50			ns	
Input Signal Rise Time	t_r			50	ns	
Input Signal Fall Time	t_f			50	ns	
/DISPOFF Remoal Time	t_{SD}	100			ns	
/DISPOFF Enable Pulse Width	t_{WDL}	1.2			ns	
Output Delay Time (1)	t_D			200	ns	$C_L=15pF$
Output Delay Time (2)	t_{pd1}, t_{pd2}			1.2	µ s	$C_L=15pF$
Output Delay Time (3)	t_{pd3}			1.2	µ s	$C_L=15pF$

TFT TRANSMISSIVE LCD MODULES

YTS 240DLAC-03-100N

2.4'', 240 X 320 DOTS, 1/320 DUTY

EXTERNAL DIMENSION AND DISPLAY PATTERN

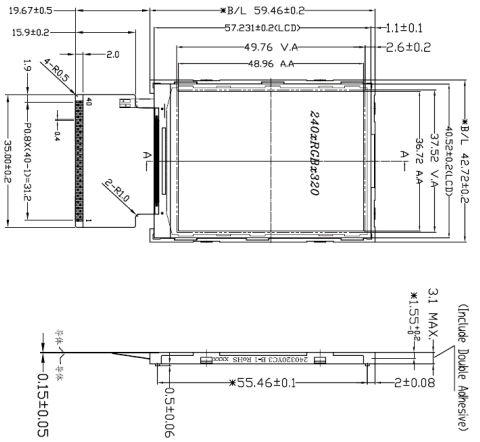

1	LED_A	21	DB7
2	LED_A	22	DB6
3	LED_A	23	DB5
4	LED_A	24	DB4
5	LED_K	25	DB3
6	P68	26	DB2
7	BS0	27	DB1
8	BS1	28	DB0
9	BS2	29	SDO
10	RESET	30	SDI
11	DB17	31	NRD_E
12	DB16	32	NWR_RNW
13	DB15	33	DNC_SCL
14	DB14	34	NCS
15	DB13	35	VCC
16	DB12	36	GND
17	DB11	37	NC(XR)
18	DB10	38	NC(YD)
19	DB9	39	NC(XL)
20	DB8	40	NC(YU)

MECHANICAL DATA

ITEM	SPECIFICATION	UNIT
Module Size (W x H)	42.72 x 59.46 x 3.1	mm
Active Area (W x H)	36.72 x 48.96	mm
Viewing Direction	6:00	o´clock
Number of Dots	240 (RGB) x 320	dots
Colors	262K	

ABSOLUTE MAXIMUM RATINGS

PARAMETER	SYMBOL	MIN.	MAX.	UNIT
Supply Voltage 1	IOV_{CC}	-0.3	4.6	V
Supply Voltage 2	V_{CI}	-0.3	4.6	V
Supply Voltage 3	DDV_{DH}	-0.3	9.0	V
Supply Voltage 4	V_{CL}	-4.6	0.3	V
Supply Voltage 5	V_{GH}	-0.3	18.5	V
Supply Voltage 6	V_{GL}	-18.5	0.3	V
Input Voltage	V_{IN}	-0.3	V_{CI} +0.3	V
Operating Temperature	See page 8			
Storage Temperature				

PIN CONFIGURATION

PIN	SYMBOL	SIGNAL DESCRIPTION
1-4	LED_A	Backlight LED Power
5	LED_K	Backlight LED Power
6	P_{68}	Select the MPU Interface Mode
7	BS_0	Select the MPU Interface Mode
8	BS_1	Select the MPU Interface Mode
9	BS_2	Select the MPU Interface Mode
10	RESET	Reset Pin
11-28	DB_{17}-DB_0	Data Bus
29	SD_0	Serial Data Output
30	SD_I	Serial Data Input Pin
31	NRD_E	I80 System: Serves as a Read Signal and Read Data at the Low Level. M68 System: 0 - Read/Write Disable; 1 - Read/Write Enable. Fix it to IOV_{CC} or V_{SSD} Level when Using Serial Buss Interface.
32	NWR_RNW	I80 System: Serves as a Write Signal and Write Data at the Rising Edge. M68 System: 0 - Write; 1 - Read. Fix it to IOV_{CC} or V_{SSD} Level when Using Serial Buss Interface.
33	DNC_SCL	The Signal for Command or Parameter Select under Parallel Mode (i.e. Not Serial Interface). When under Serial Interface, it servers as SCL.
34	NCS	Chip Select Signal
35	V_{CC}	Power Supply
36	GND	Ground
37-40	NC	No Connection

ELECTRICAL CHARACTERISTICS, Ta = 25°C

ITEM	SYMBOL	CONDITION	SPEC. VALUE			UNIT
			MIN.	TYP.	MAX.	
TFT Gate ON Voltage	V_{GH}			15.0		V
TFT Gate OFF Voltage	V_{GL}	Ta=+25°C		-8.0		V
TFT Common Electrode Voltage	V_{comH} V_{comL}		2.5 -2.0		4.5 0	V

Note (1): V_{com} must be adjusted to optimize display quality: cross talk, contrast ratio and etc.
Note (2): V_{GH} is TFT gate operating voltage.
Note (3): V_{GL} is TFT gate operating voltage. The storage capacitance structure of this products is C_{st} (Storage on Common). The low voltage level of V_{GL} signal must be fluctuated with same phase as V_{com}, in case of Storage on Gate structure.
Note (4): Environmental condition: 25°C±5°C.
Note (5): Operating Voltage V_{CC}=3.3V

BACKLIGHTING CHARACTERISTICS, Ta = 25°C, LED

ITEM	SYMBOL	CONDITION	SPEC. VALUE			UNIT
			MIN.	TYP.	MAX.	
Forward Voltage	V_f	I_F=20mA		9.6		V
Reverse Current	I_r	V_r=5.0V		20		µA
Luminance	L_V	I_F=20mA	2900	3200		cd/m²
Average	Avg	- Aperture: 1°, 9 Point. - The Measurement Instrument is BM-7. - Average=min. / max. *100%	80			%
Colour Coordinate	X		0.26		0.31	
	Y		0.26		0.31	

digital electronic gmbh • Tel. +49 (0) 8221/708-0 Fax. +49 (0) 8221/708-80

All specifications subject to change without notice.

TFT TRANSMISSIVE LCD MODULES

YTS 240DLAC-03-100N

2.4'',240 X 320 DOTS, 1/320 DUTY

INTERFACE TIMING CHARACTERISTICS

V_{SSA}= 0V, IOCC=1.65V to 2.9V, VCI=2.3V to 2.9V, Ta=-30°C to 70°C

Parallel Interface Characteristics (8080 Series MPU)

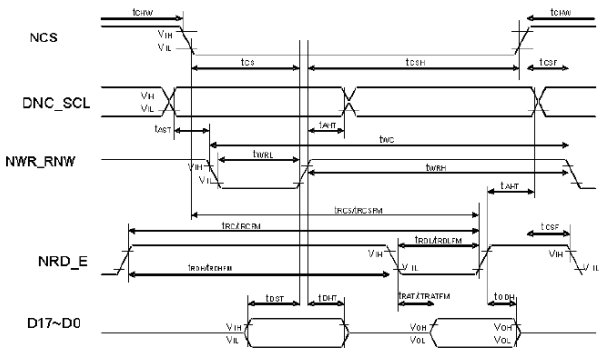

Note (1): The input signal rise time and fall time (t_r, t_f) is specified at 15 ns or less.
Logic high and low levels are specified as 30% and 70% of IOV_{CC} for input signals.

PARAMETER	SIGNAL	SYMBOL	TEST CONDITIONS	MIN.	MAX.	UNIT
Address Hold Time	DNC_SCL	t_{AHT}	Write/Read	10		ns
Address Setup Time		t_{AST}		10		ns
Chip Select „H" Pulse Width	NCS	t_{CHW}		0		ns
Chip Select Setup Time (Write)		t_{CS}		35		ns
Chip Select Setup Time		t_{RCSFM}		355		ns
Chip Select Wait Time (Write/Read)		t_{CSF}		10		ns
Chip Select Hold Time		t_{CSH}		10		ns
Write Cycle	NWR_RNW	t_{WC}		100		ns
Control Pulse „H" Duration		t_{WRH}		35		ns
Control Pulse „L" Duration		t_{WRL}		35		ns
Read Cycle	NRD_E	t_{RCFM}	When read from GRAM	450		ns
Control Pulse „H" Duration		t_{RDHFM}		90		ns
Control Pulse „L" Duration		t_{RDLFM}		355		ns
Data Setup Time	D_{17} to D_0	t_{DST}	for max. C_L=30 pF for min. C_L=8 pF	15		ns
Data Hold Time		t_{DHT}		10		ns
Read Access Time		t_{RATFM}			340	ns
Output Disable Time		t_{ODH}		20	80	ns

Parallel Interface Characteristics (6800 Series MPU)

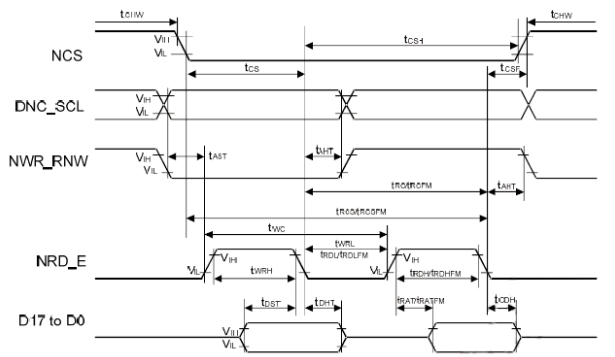

Note (2): The input signal rise time and fall time (t_r, t_f) is specified at 15 ns or less.
Logic high and low levels are specified as 30% and 70% of IOV_{CC} for input signals.

PARAMETER	SIGNAL	SYMBOL	TEST CONDITIONS	MIN.	MAX.	UNIT
Address Hold Time	DNC_SCL	t_{AHT}	Write/Read	10		ns
Address Setup Time		t_{AST}		10		ns
Chip Select „H" Pulse Width	NCS	t_{CHW}		0		ns
Chip Select Setup Time (Write)		t_{CS}		35		ns
Chip Select Setup Time		t_{RCSFM}		355		ns
Chip Select Wait Time (Write/Read)		t_{CSF}		10		ns
Chip Select Hold Time		t_{CSH}		10		ns
Write Cycle	NWR_RNW	t_{WC}		100		ns
Control Pulse „H" Duration		t_{WRH}		35		ns
Control Pulse „L" Duration		t_{WRL}		35		ns
Read Cycle	NRD_E	t_{RCFM}	When read from GRAM	450		ns
Control Pulse „H" Duration		t_{RDHFM}		90		ns
Control Pulse „L" Duration		t_{RDLFM}		355		ns
Data Setup Time	D_{17} to D_0	t_{DST}	for max. C_L=30 pF for min. C_L=8 pF	10		ns
Data Hold Time		t_{DHT}		10		ns
Read Access Time (ID)		t_{RAT}			100	
Read Access Time (FM)		t_{RATFM}			340	ns
Output Disable Time		t_{ODH}		20	80	ns

The Serial Interface Characteristics

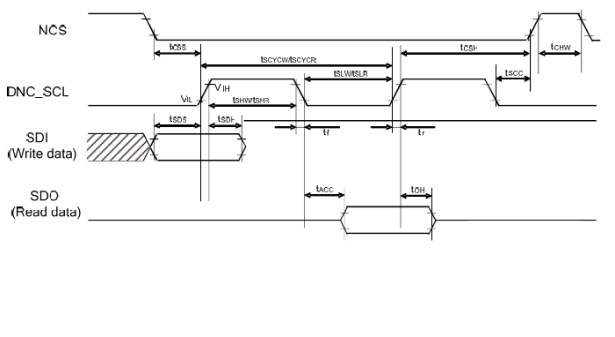

Note (2): The input signal rise time and fall time (t_r, t_f) is specified at 15 ns or less.
Logic high and low levels are specified as 30% and 70% of IOV_{CC} for input signals.

PARAMETER	SIGNAL	SYMBOL	TEST CONDITIONS	MIN.	MAX.	UNIT
Senal Clock Cycle (Write)	DNC_SCL	t_{SCYCW}		100		ns
DNC_SCL „H" Pulse Width (Write)		t_{SHW}		35		ns
DNC_SCL „L" Pulse Width (Write)		t_{SLW}		35		ns
Data Setup Time (Write)	SDI	t_{SDS}		30		ns
Data Hold Time (Write)		t_{SDH}		30		ns
Senal Clock Cycle (Read)	DNC_SCL	t_{SCYCR}		150		ns
DNC_SCL „H" Pulse Width (Read)		t_{SHR}		60		ns
DNC_SCL „L" Pulse Width (Read)		t_{SLR}		60		ns
Access Time		t_{ACC}	SD_0 for max. C_L=30pF, for min. C_L=8 pF	45	100	ns
Output Disable Time		t_{OH}		15	100	ns
DNC_SCL to Chip Select	DNC_SCL, NCS	t_{SCC}		15		ns
NCS „H" Pulse Width	NCS	t_{CHW}		45		ns
Chip Select Setup Time		t_{CSS}		60		ns
Chip Select Hold Time		t_{CSH}		65		ns

TFT TRANSMISSIVE LCD MODULES

YTS 240DLAC-03-100T

2.4'', 240 X 320 DOTS, 1/320 DUTY

EXTERNAL DIMENSION AND DISPLAY PATTERN

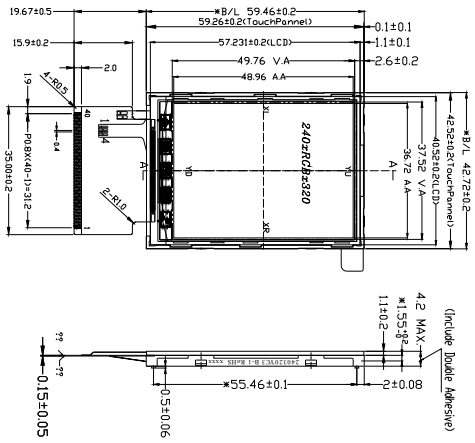

1	LED_A	21	DB7
2	LED_A	22	DB6
3	LED_A	23	DB5
4	LED_A	24	DB4
5	LED_K	25	DB3
6	P68	26	DB2
7	BS0	27	DB1
8	BS1	28	DB0
9	BS2	29	SDO
10	RESET	30	SDI
11	DB17	31	NRD_E
12	DB16	32	NWR_RNW
13	DB15	33	DNC_SCL
14	DB14	34	NCS
15	DB13	35	VCC
16	DB12	36	GND
17	DB11	37	XR
18	DB10	38	YD
19	DB9	39	XL
20	DB8	40	YU

MECHANICAL DATA

ITEM	SPECIFICATION	UNIT
Module Size (W x H)	42.72 x 59.46 x 4.2	mm
Active Area (W x H)	36.72 x 48.96	mm
Viewing Direction	6:00	o´clock
Number of Dots	240 (RGB) x 320	dots
Colors	262K	

ABSOLUTE MAXIMUM RATINGS

PARAMETER	SYMBOL	MIN.	MAX.	UNIT
Supply Voltage 1	IOV_{CC}	-0.3	4.6	V
Supply Voltage 2	V_{CI}	-0.3	4.6	V
Supply Voltage 3	DDV_{DH}	-0.3	9.0	V
Supply Voltage 4	V_{CL}	-4.6	0.3	V
Supply Voltage 5	V_{GH}	-0.3	18.5	V
Supply Voltage 6	V_{GL}	-18.5	0.3	V
Input Voltage	V_{IN}	-0.3	V_{CI} +0.3	V
Operating Temperature	See page 8			
Storage Temperature				

PIN CONFIGURATION

PIN	SYMBOL	SIGNAL DESCRIPTION
1-4	LED_A	Backlight LED Power
5	LED_K	Backlight LED Power
6	P_{68}	Select the MPU Interface Mode
7	BS_0	Select the MPU Interface Mode
8	BS_1	Select the MPU Interface Mode
9	BS_2	Select the MPU Interface Mode
10	RESET	Reset Pin
11-28	DB_{17}-DB_0	Data Bus
29	SD_0	Serial Data Output
30	SD_I	Serial Data Input Pin
31	NRD_E	I80 System: Serves as a Read Signal and Read Data at the Low Level. M68 System: 0 - Read/Write Disable; 1 - Read/Write Enable. Fix it to IOV_{CC} or V_{SSD} Level when Using Serial Buss Interface.
32	NWR_RNW	I80 System: Serves as a Write Signal and Write Data at the Rising Edge. M68 System: 0 - Write; 1 - Read. Fix it to IOV_{CC} or V_{SSD} Level when Using Serial Buss Interface.
33	DNC_SCL	The Signal for Command or Parameter Select under Parallel Mode (i.e. Not Serial Interface). When under Serial Interface, it servers as SCL.
34	NCS	Chip Select Signal
35	V_{CC}	Power Supply
36	GND	Ground
37	XR	The Pin of Touch Panel
38	YD	The Pin of Touch Panel
39	XL	The Pin of Touch Panel
40	YU	The Pin of Touch Panel

ELECTRICAL CHARACTERISTICS, Ta = 25°C

ITEM	SYMBOL	CONDITION	SPEC. VALUE			UNIT
			MIN.	TYP.	MAX.	
TFT Gate ON Voltage	V_{GH}			15.0		V
TFT Gate OFF Voltage	V_{GL}	Ta=+25°C		-8.0		V
TFT Common Electrode Voltage	V_{comH} V_{comL}		2.5 -2.0		4.5 0	V

Note (1): V_{com} must be adjusted to optimize display quality: cross talk, contrast ratio and etc.
Note (2): V_{GH} is TFT gate operating voltage.
Note (3): V_{GL} is TFT gate operating voltage. The storage capacitance structure of this products is C_{st} (Storage on Common). The low voltage level of V_{GL} signal must be fluctuated with same phase as V_{com}, in case of Storage on Gate structure.
Note (4): Environmental condition: 25°C±5°C.
Note (5): Operating Voltage V_{CC}=3.3V

BACKLIGHTING CHARACTERISTICS, Ta = 25°C, LED

ITEM	SYMBOL	CONDITION	SPEC. VALUE			UNIT
			MIN.	TYP.	MAX.	
Forward Voltage	V_f	I_F=20mA		9.6		V
Reverse Current	I_r	V_r=5.0V		20		µA
Luminance	L_V	I_F=20mA	2900	3200		cd/m²
Average	Avg	- Aperture: 1°, 9 Point. - The Measurement Instrument is BM-7. - Average=min. / max. *100%	80			%
Colour Coordinate	X		0.26		0.31	
	Y		0.26		0.31	

digital electronic gmbh • Tel. +49 (0) 8221/708-0 Fax. +49 (0) 8221/708-80

All specifications subject to change without notice.

TFT TRANSMISSIVE LCD MODULES

YTS 240DLAC-03-100T

2.4'', 240 X 320 DOTS, 1/320 DUTY

INTERFACE TIMING CHARACTERISTICS

V_{SSA}= 0V, IOCC=1.65V to 2.9V, VCI=2.3V to 2.9V, Ta=-30°C to 70°C

Parallel Interface Characteristics (8080 Series MPU)

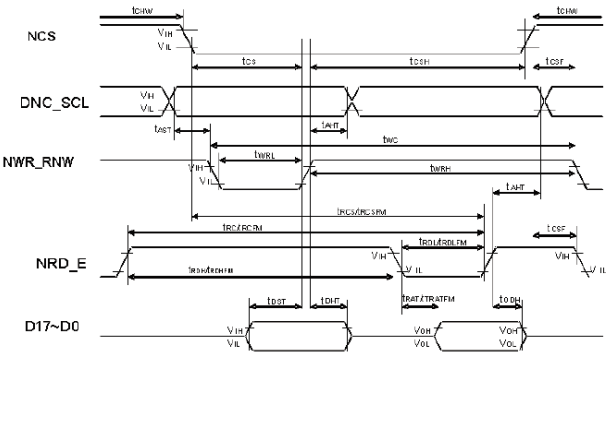

Note (1): The input signal rise time and fall time (t_r, t_f) is specified at 15 ns or less.
Logic high and low levels are specified as 30% and 70% of IOV_{CC} for input signals.

PARAMETER	SIGNAL	SYMBOL	TEST CONDITIONS	MIN.	MAX.	UNIT
Address Hold Time	DNC_SCL	t_{AHT}	Write/Read	10		ns
Address Setup Time		t_{AST}		10		ns
Chip Select „H" Pulse Width	NCS	t_{CHW}		0		ns
Chip Select Setup Time (Write)		t_{CS}		35		ns
Chip Select Setup Time		t_{RCSFM}		355		ns
Chip Select Wait Time (Write/Read)		t_{CSF}		10		ns
Chip Select Hold Time		t_{CSH}		10		ns
Write Cycle	NWR_RNW	t_{WC}		100		ns
Control Pulse „H" Duration		t_{WRH}		35		ns
Control Pulse „L" Duration		t_{WRL}		35		ns
Read Cycle	NRD_E	t_{RCFM}	When read from GRAM	450		ns
Control Pulse „H" Duration		t_{RDHFM}		90		ns
Control Pulse „L" Duration		t_{RDLFM}		355		ns
Data Setup Time	D_{17} to D_0	t_{DST}	for max. C_L=30 pF for min. C_L=8 pF	15		ns
Data Hold Time		t_{DHT}		10		ns
Read Access Time		t_{RATFM}			340	ns
Output Disable Time		t_{ODH}		20	80	ns

Parallel Interface Characteristics (6800 Series MPU)

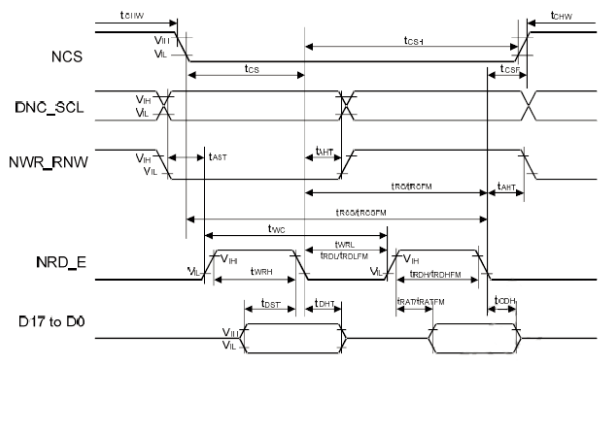

Note (2): The input signal rise time and fall time (t_r, t_f) is specified at 15 ns or less.
Logic high and low levels are specified as 30% and 70% of IOV_{CC} for input signals.

PARAMETER	SIGNAL	SYMBOL	TEST CONDITIONS	MIN.	MAX.	UNIT
Address Hold Time	DNC_SCL	t_{AHT}	Write/Read	10		ns
Address Setup Time		t_{AST}		10		ns
Chip Select „H" Pulse Width	NCS	t_{CHW}		0		ns
Chip Select Setup Time (Write)		t_{CS}		35		ns
Chip Select Setup Time		t_{RCSFM}		355		ns
Chip Select Wait Time (Write/Read)		t_{CSF}		10		ns
Chip Select Hold Time		t_{CSH}		10		ns
Write Cycle	NWR_RNW	t_{WC}		100		ns
Control Pulse „H" Duration		t_{WRH}		35		ns
Control Pulse „L" Duration		t_{WRL}		35		ns
Read Cycle	NRD_E	t_{RCFM}	When read from GRAM	450		ns
Control Pulse „H" Duration		t_{RDHFM}		90		ns
Control Pulse „L" Duration		t_{RDLFM}		355		ns
Data Setup Time	D_{17} to D_0	t_{DST}	for max. C_L=30 pF for min. C_L=8 pF	10		ns
Data Hold Time		t_{DHT}		10		ns
Read Access Time (ID)		t_{RAT}			100	
Read Access Time (FM)		t_{RATFM}			340	ns
Output Disable Time		t_{ODH}		20	80	ns

The Serial Interface Characteristics

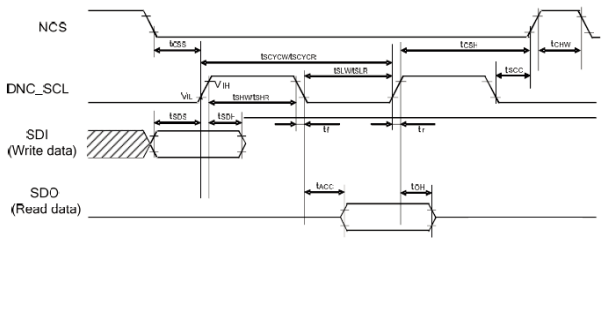

Note (2): The input signal rise time and fall time (t_r, t_f) is specified at 15 ns or less.
Logic high and low levels are specified as 30% and 70% of IOV_{CC} for input signals.

PARAMETER	SIGNAL	SYMBOL	TEST CONDITIONS	MIN.	MAX.	UNIT
Senal Clock Cycle (Write)	DNC_SCL	t_{SCYCW}		100		ns
DNC_SCL „H" Pulse Width (Write)		t_{SHW}		35		ns
DNC_SCL „L" Pulse Width (Write)		t_{SLW}		35		ns
Data Setup Time (Write)	SDI	t_{SDS}		30		ns
Data Hold Time (Write)		t_{SDH}		30		ns
Senal Clock Cycle (Read)	DNC_SCL	t_{SCYCR}		150		ns
DNC_SCL „H" Pulse Width (Read)		t_{SHR}		60		ns
DNC_SCL „L" Pulse Width (Read)		t_{SLR}		60		ns
Access Time		t_{ACC}	SD_0 for max. C_L=30pF, for min. C_L=8 pF	45	100	ns
Output Disable Time		t_{OH}		15	100	ns
DNC_SCL to Chip Select	DNC_SCL, NCS	t_{SCC}		15		ns
NCS „H" Pulse Width	NCS	t_{CHW}		45		ns
Chip Select Setup Time		t_{CSS}		60		ns
Chip Select Hold Time		t_{CSH}		65		ns

TFT TRANSMISSIVE LCD MODULES

YTS 240DLAG-01-102N

2.4'', 240 X 320 DOTS, 1/320 DUTY

EXTERNAL DIMENSION AND DISPLAY PATTERN

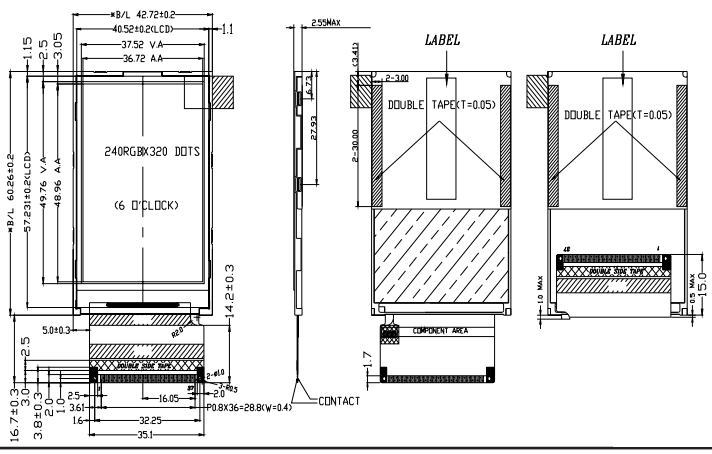

1	DB0	24	DB9
2	DB1	25	DB10
3	DB2	26	DB11
4	DB3	27	DB12
5	GND	28	DB13
6	VCC	29	DB14
7	/CS	30	DB15
8	RS	31	/RESET
9	/WR	32	VCC
10	/RD	33	VCC
11	IM0	34	GND
12	XL(NC)	35	DB5
13	YU(NC)	36	DB6
14	XR(NC)	37	DB7
15	YD(NC)		
16	LED_A		
17	LED_K1		
18	LED_K2		
19	LED_K3		
20	LED_K4		
21	IM3		
22	DB4		
23	DB8		

MECHANICAL DATA

ITEM	SPECIFICATION	UNIT
Module Size (W x H)	42.72 x 60.26 x 2.55	mm
Active Area (W x H)	36.72 x 48.96	mm
Viewing Direction	6:00	o´clock
Number of Dots	240 (RGB) x 320	dots
Colors	262K	

Note (1): GND must be maintained. High $V_{CI} \geq$ GND (Low), (High) $IOV_{CC} \geq$ GND (Low). Mke sure (High): $V_{CI} \geq$ GND (Low); $DDV_{DH} \geq$ GND (Low); $DDV_{DH} \geq V_{CL}$ (Low); $V_{GH} \geq$ GND (Low); GND $\geq V_{GL}$ (Low);

ABSOLUTE MAXIMUM RATINGS *Note1

PARAMETER	SYMBOL	MIN.	MAX.	UNIT
Supply Voltage (Digital)	IOV_{CC}-GND	-0.3	4.6	V
Supply Voltage (Analog)	V_{CI}-GND	-0.3	4.6	V
Driver Supply Voltage Range	DDV_{DH}-GND	-0.3	6.0	V
	V_{COMH}-V_{COML}	-0.3	6.0	V
	GND-V_{CL}	-0.3	4.6	V
	DDV_{DH}-V_{CL}	-0.3	9.0	V
	V_{GH}-V_{GL}	-0.3	30.0	V
Input Voltage	V_t	-0.3	IOV_{CC} +0.3	V
Operating Temperature	See page 8			
Storage Temperature				

PIN CONFIGURATION

PIN	SYMBOL	SIGNAL DESCRIPTION
1-4	DB_{17}-DB_0	Data Bus
5	GND	Ground
6	V_{CC}	Power Supply
7	/CS	Chip Select Signal
8	RS	Register Select Signal
9	/WR	Write Strobe Signal and Enables an Operation to Write Data when the Signal is low.
10	/RD	
11	IMO	Select the MPU System Interface Mode.
12-15	XL,YU,XR,YD (NC)	No Connection
16	LED_A	LED Backlight
17	LED_K_1	LED Backlight
18	LED_K_2	LED Backlight
19	LED_K_3	LED Backlight
20	LED_K_4	LED Backlight
21	IM_3	Select the MPU System Interface Mode
22	DB_4	Data Bus
23-30	DB_8-DB_{15}	Data Bus
31	RESET	Reset Pin
32-33	V_{CC}	Power Supply
34	GND	Ground
35	DB_5	Data Bus
36	DB_6	Data Bus
37	DB_7	Data Bus

ELECTRICAL CHARACTERISTICS, Ta=25°C

ITEM	SYMBOL	CONDITION	SPEC. VALUE			UNIT
			MIN.	TYP.	MAX.	
TFT Gate ON Voltage	V_{GH}			15.0		V
TFT Gate OFF Voltage	V_{GL}	Ta=+25°C		-8.0		V
TFT Common Electrode Voltage	V_{comH} V_{comL}		2.5 -2.0		4.5 0	V

Note (2): V_{com} must be adjusted to optimize display quality: cross talk, contrast ratio and etc.
Note (3): V_{GH} is TFT gate operating voltage.
Note (4): V_{GL} is TFT gate operating voltage. The storage capacitance structure of this products is C_{st} (Storage on Common). The low voltage level of V_{GL} signal must be fluctuated with same phase as V_{com}, in case of Storage on Gate structure.
Note (5): Environmental condition: 25°C±5°C.
Note (6): Operating Voltage V_{CC}=2.8V

BACKLIGHTING CHARACTERISTICS, Ta=25°C, LED

ITEM	SYMBOL	CONDITION	SPEC. VALUE			UNIT
			MIN.	TYP.	MAX.	
Forward Voltage	V_f	I_F=60mA	2.9	3.2	3.4	V
Reverse Current	I_r	V_r=5.0V			50	µA
Luminance	L_V	I_F=60mA	3500	3800		cd/m²
Average	Avg		80			%
Colour Coordinate	X		0.24		0.30	
	Y		0.24		0.30	

digital electronic gmbh • Tel. +49 (0) 8221/708-0 Fax. +49 (0) 8221/708-80

All specifications subject to change without notice.

TFT TRANSMISSIVE LCD MODULES

YTS 240DLAG-01-102N

2.4'', 240 X 320 DOTS, 1/320 DUTY

INTERFACE TIMING CHARACTERISTICS

Normal Write Mode IOV_{CC}=1.65V to 3.3V

I80-System Interface Timing Chracteristics

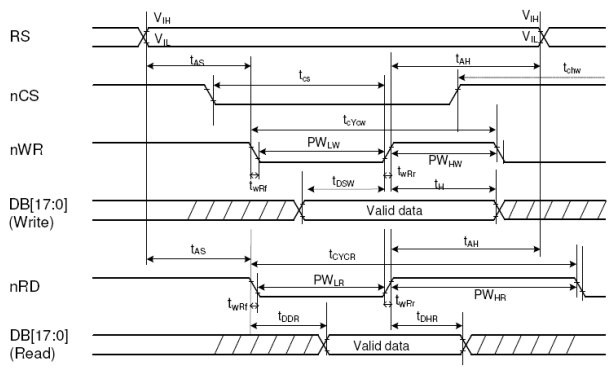

PARAMETER		SYMBOL	TEST CONDITIONS	MIN.	MAX.	UNIT
Bus Cycle Time	Write	t_{CYCW}		80		ns
	Read	t_{CYCR}		300		ns
Write Low Level Pulse Width		PW_{LW}		50		ns
Write High Level Pulse Width		PW_{HW}		15		ns
Read Low Level Pulse Width		PW_{LR}		150		ns
Read High Level Pulse Width		PW_{HR}		150		ns
Write / Read Rise/Fall Time		t_{WRr}/t_{WRf}			25	ns
Setup Time	Write	t_{AS}	RS to nCS, E/nWR	10		ns
	Read		RS to nCS, RW/nRD	5		ns
Address Hold Time		t_{AH}		5		ns
Write Data Setup Time		t_{DSW}		10		ns
Write Data Hold Time		t_H		15		ns
Read Data Delay Time		t_{DDR}			100	ns
Read Data Hold Time		t_{DHR}		20	100	ns

TFT TRANSMISSIVE LCD MODULES

YTS 280DLAC-03-200N

2.8'', 240 X 320 DOTS, 1/320 DUTY

EXTERNAL DIMENSION AND DISPLAY PATTERN

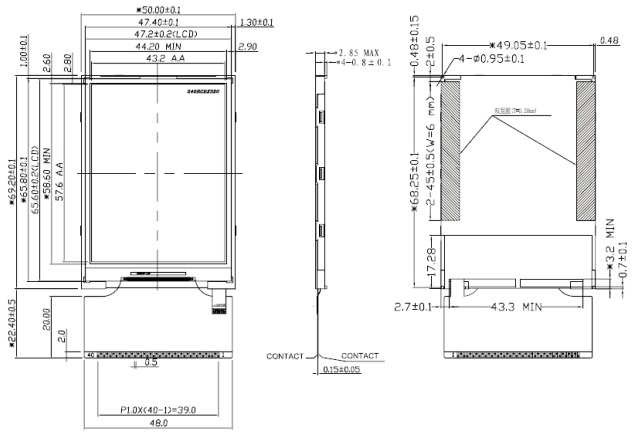

1	LED_K4	21	DB7
2	LED_K3	22	DB6
3	LED_K2	23	DB5
4	LED_K1	24	DB4
5	LED_A	25	DB3
6	P68	26	DB2
7	BS0	27	DB1
8	BS1	28	DB0
9	BS2	29	SDO
10	RESET	30	SDI
11	DB17	31	NRD_E
12	DB16	32	NWR_RNW
13	DB15	33	DNC_SCL
14	DB14	34	NCS
15	DB13	35	VCC
16	DB12	36	GND
17	DB11	37	X1/NC
18	DB10	38	Y1/NC
19	DB9	39	X2/NC
20	DB8	40	Y2/NC

MECHANICAL DATA

ITEM	SPECIFICATION	UNIT
Module Size (W x H)	50.0 x 69.20 x 2.85	mm
Active Area (W x H)	44.20 x 58.60	mm
Viewing Direction	6:00	o´clock
Number of Dots	240 (RGB) x 320	dots
Colors	262K	
Surface Brightness	160	cd/m²

ABSOLUTE MAXIMUM RATINGS

PARAMETER	SYMBOL	MIN.	MAX.	UNIT
Supply Voltage 1	IOV_{CC}	-0.3	4.6	V
Supply Voltage 2	V_{CI}	-0.3	4.6	V
Supply Voltage 3	DDV_{DH}	-0.3	9.0	V
Supply Voltage 4	V_{CL}	-4.6	0.3	V
Supply Voltage 5	V_{GH}	-0.3	18.5	V
Supply Voltage 6	V_{GL}	-18.5	0.3	V
Input Voltage	V_{IN}	-0.3	V_{CI} +0.3	V
Operating Temperature	See page 8			
Storage Temperature				

PIN CONFIGURATION

PIN	SYMBOL	SIGNAL DESCRIPTION
1	LED_K_4	Backlight LED Power
2	LED_K_3	
3	LED_K_2	
4	LED_K_1	
5	LED_A	
6	P_{68}	Select the MPU Interface Mode
7	BS_0	Select the MPU Interface Mode
8	BS_1	Select the MPU Interface Mode
9	BS_2	Select the MPU Interface Mode
10	RESET	Reset Pin
11-28	DB_{17}~DB_0	Data Bus
29	SD_0	Serial Data Output. If not use, let it to open.
30	SD_I	Serial Data Input Pin
31	NRD_E	I80 System: Serves as a Read Signal and Read Data at the Low Level. M68 System: 0 - Read/Write Disable; 1 - Read/Write Enable. Fix it to IOV_{CC} or V_{SSD} Level when Using Serial Buss Interface.
32	NWR_RNW	I80 System: Serves as a Write Signal and Write Data at the Rising Edge. M68 System: 0 - Write; 1 - Read. Fix it to IOV_{CC} or V_{SSD} Level when Using Serial Buss Interface.
33	DNC_SCL	The Signal for Command or Parameter Select under Parallel Mode
34	NCS	Chip Select Signal
35	V_{CC}	Power Supply
36	GND	Ground
37-40	X_1/NC, Y_1/NC, X_2/NC, Y_2/NC	No Connection

ELECTRICAL CHARACTERISTICS, Ta=25°C

ITEM	SYMBOL	CONDITION	SPEC. VALUE			UNIT
			MIN.	TYP.	MAX.	
TFT Gate ON Voltage	V_{GH}			15.0		V
TFT Gate OFF Voltage	V_{GL}	Ta=+25°C		-8.0		V
TFT Common Electrode Voltage	V_{comH} V_{comL}		2.5 -2.0		4.5 0	V

Note (1): V_{com} must be adjusted to optimize display quality: cross talk, contrast ratio and etc.
Note (2): V_{GH} is TFT gate operating voltage.
Note (3): V_{GL} is TFT gate operating voltage. The storage capacitance structure of this products is C_{st} (Storage on Common). The low voltage level of V_{GL} signal must be fluctuated with same phase as V_{com}, in case of Storage on Gate structure.
Note (4): Environmental condition: 25°C±5°C.
Note (5): Operating Voltage V_{CC}=3.3V

BACKLIGHTING CHARACTERISTICS, Ta=25°C, LED

ITEM	SYMBOL	CONDITION	SPEC. VALUE			UNIT
			MIN.	TYP.	MAX.	
Supply Voltage	V_{DD} - V_{SS}		3.0		3.4	V
Supply Current	I_{DD}	fixed		60		µA
Luminance	L_V		3000		5000	cd/m²
Average	Avg		80			%
Colour Coordinate	X		0.26		0.31	
	Y		0.26		0.31	

Note (6): Operating temperature -20°C to +70°C; Storage temperature -30°C to +80°C.
Note (7): LED - 4 pcs.

digital electronic gmbh • Tel. +49 (0) 8221/708-0 Fax. +49 (0) 8221/708-80

All specifications subject to change without notice.

TFT TRANSMISSIVE LCD MODULES

YTS 280DLAC-03-200N

2.8'', 240 X 320 DOTS, 1/320 DUTY

INTERFACE TIMING CHARACTERISTICS

V_{SSA}= 0V, IOCC=1.65V to 2.9V, VCI=2.3V to 2.9V, Ta=-30°C to 70°C

Parallel Interface Characteristics (8080 Series MPU)

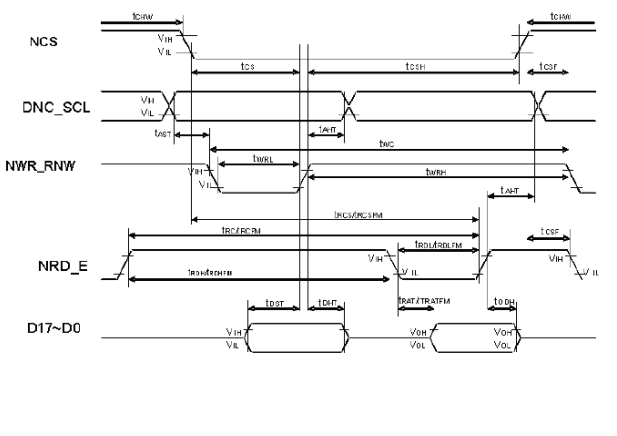

Note (1): The input signal rise time and fall time (t_r, t_f) is specified at 15 ns or less.
Logic high and low levels are specified as 30% and 70% of IOV_{CC} for input signals.

PARAMETER	SIGNAL	SYMBOL	TEST CONDITIONS	MIN.	MAX.	UNIT
Address Hold Time	DNC_SCL	t_{AHT}	Write/Read	10		ns
Address Setup Time		t_{AST}		10		ns
Chip Select „H" Pulse Width	NCS	t_{CHW}		0		ns
Chip Select Setup Time (Write)		t_{CS}		35		ns
Chip Select Setup Time		t_{RCSFM}		355		ns
Chip Select Wait Time (Write/Read)		t_{CSF}		10		ns
Chip Select Hold Time		t_{CSH}		10		ns
Write Cycle	NWR_RNW	t_{WC}		100		ns
Control Pulse „H" Duration		t_{WRH}		35		ns
Control Pulse „L" Duration		t_{WRL}		35		ns
Read Cycle	NRD_E	t_{RCFM}	When read from GRAM	450		ns
Control Pulse „H" Duration		t_{RDHFM}		90		ns
Control Pulse „L" Duration		t_{RDLFM}		355		ns
Data Setup Time	D_{17} to D_0	t_{DST}	for max. C_L=30 pF for min. C_L=8 pF	15		ns
Data Hold Time		t_{DHT}		10		ns
Read Access Time		t_{RATFM}			340	ns
Output Disable Time		t_{ODH}		20	80	ns

Parallel Interface Characteristics (6800 Series MPU)

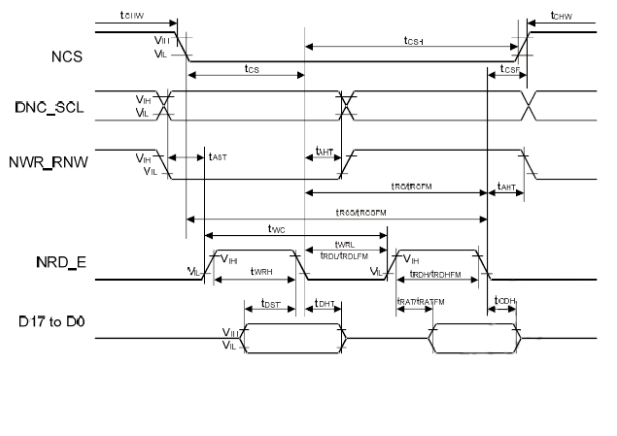

Note (2): The input signal rise time and fall time (t_r, t_f) is specified at 15 ns or less.
Logic high and low levels are specified as 30% and 70% of IOV_{CC} for input signals.

PARAMETER	SIGNAL	SYMBOL	TEST CONDITIONS	MIN.	MAX.	UNIT
Address Hold Time	DNC_SCL	t_{AHT}	Write/Read	10		ns
Address Setup Time		t_{AST}		10		ns
Chip Select „H" Pulse Width	NCS	t_{CHW}		0		ns
Chip Select Setup Time (Write)		t_{CS}		35		ns
Chip Select Setup Time		t_{RCSFM}		355		ns
Chip Select Wait Time (Write/Read)		t_{CSF}		10		ns
Chip Select Hold Time		t_{CSH}		10		ns
Write Cycle	NWR_RNW	t_{WC}		100		ns
Control Pulse „H" Duration		t_{WRH}		35		ns
Control Pulse „L" Duration		t_{WRL}		35		ns
Read Cycle	NRD_E	t_{RCFM}	When read from GRAM	450		ns
Control Pulse „H" Duration		t_{RDHFM}		90		ns
Control Pulse „L" Duration		t_{RDLFM}		355		ns
Data Setup Time	D_{17} to D_0	t_{DST}	for max. C_L=30 pF for min. C_L=8 pF	10		ns
Data Hold Time		t_{DHT}		10		ns
Read Access Time (ID)		t_{RAT}			100	
Read Access Time (FM)		t_{RATFM}			340	ns
Output Disable Time		t_{ODH}		20	80	ns

The Serial Interface Characteristics

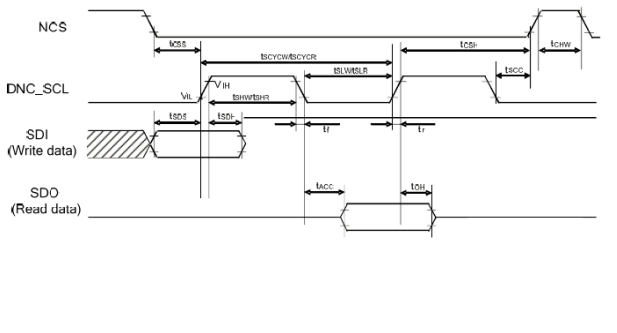

Note (2): The input signal rise time and fall time (t_r, t_f) is specified at 15 ns or less.
Logic high and low levels are specified as 30% and 70% of IOV_{CC} for input signals.

PARAMETER	SIGNAL	SYMBOL	TEST CONDITIONS	MIN.	MAX.	UNIT
Senal Clock Cycle (Write)	DNC_SCL	t_{SCYCW}		100		ns
DNC_SCL „H" Pulse Width (Write)		t_{SHW}		35		ns
DNC_SCL „L" Pulse Width (Write)		t_{SLW}		35		ns
Data Setup Time (Write)	SDI	t_{SDS}		30		ns
Data Hold Time (Write)		t_{SDH}		30		ns
Senal Clock Cycle (Read)	DNC_SCL	t_{SCYCR}		150		ns
DNC_SCL „H" Pulse Width (Read)		t_{SHR}		60		ns
DNC_SCL „L" Pulse Width (Read)		t_{SLR}		60		ns
Access Time		t_{ACC}	SD_0 for max. C_L=30pF, for min. C_L=8 pF	45	100	ns
Output Disable Time		t_{OH}		15	100	ns
DNC_SCL to Chip Select	DNC_SCL, NCS	t_{SCC}		15		ns
NCS „H" Pulse Width	NCS	t_{CHW}		45		ns
Chip Select Setup Time		t_{CSS}		60		ns
Chip Select Hold Time		t_{CSH}		65		ns

TFT TRANSMISSIVE LCD MODULES

YTS 350ELAK-01-100T

3.5'',320 X 240 DOTS, 1/240 DUTY

EXTERNAL DIMENSION AND DISPLAY PATTERN

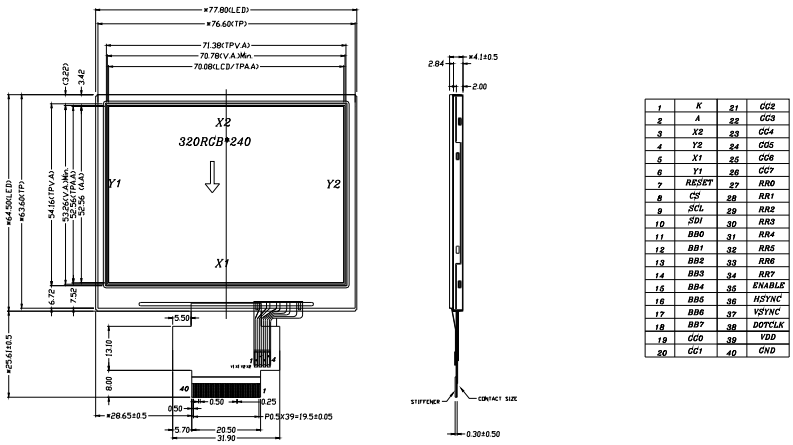

MECHANICAL DATA

ITEM	SPECIFICATION	UNIT
Module Size (W x H)	77.80 x 64.50 x 4.1	mm
Active Area (W x H)	70.08 x 52.56	mm
Viewing Direction	12:00	o´clock
Number of Dots	320 (RGB) x 240	dots
Colors	16M	

ABSOLUTE MAXIMUM RATINGS

PARAMETER	SYMBOL	MIN.	MAX.	UNIT
Supply Voltage	V_{DD}	-0.3	2.7	V
	V_{DDIO}	-0.3	4.0	V
Input Voltage	V_{CI}	V_{SS}-0.3	5.0	V
Operating Temperature	See page 8			
Storage Temperature				

Note (1): Current Drain per Pin excluding VDD and VSS: 25mA typical.

PIN CONFIGURATION

PIN	SYMBOL	SIGNAL DESCRIPTION
1	LED_K	LED Backlight
2	LED_A	
3	X_2	The Pin of Touch Panel
4	Y_2	
5	X_1	
6	Y_1	
7	RESET	Reset Pin
8	CS	Chip Select Pin
9	SCL	Clock Pin of Serial Mode
10	SDI	Data Input Pin in Serial Mode
11-18	BB_0-BB_7	Blue Data
19-26	GG_0-GG_7	Green Data
27-34	RR_0-RR_7	Red Data
35	ENABLE	Display Enable Pin from Controller
36	HSYNC	Line Synchronization Signal
37	VSYNC	Frame Synchronization Signal
38	DOTCLK	Dot-Clock Signal and Oscillator Source
39	V_{DD}	Power Supply
40	GND	Ground

ELECTRICAL CHARACTERISTICS, Ta=25°C

ITEM	SYMBOL	CONDITION	SPEC. VALUE			UNIT
			MIN.	TYP.	MAX.	
TFT Gate ON Voltage	V_{GH}			15.0		V
TFT Gate OFF Voltage	V_{GL}	Ta=+25°C		-10.0		V
TFT Common Electrode Voltage	V_{comH} V_{comL}		2.5 -2.0	(3.6) (-2.4)	4.5 0	V

Note (2): V_{com} must be adjusted to optimize display quality: cross talk, contrast ratio and etc.
Note (3): V_{GH} is TFT gate operating voltage.
Note (4): V_{GL} is TFT gate operating voltage. The storage capacitance structure of this products is C_{st} (Storage on Common). The low voltage level of V_{GL} signal must be fluctuated with same phase as V_{com}, in case of Storage on Gate structure.
Note (5): Environmental condition: 25°C±5°C.
Note (6): Operating Voltage V_{CC}=3.3V

BACKLIGHTING CHARACTERISTICS, Ta=25°C, LED

ITEM	SYMBOL	CONDITION	SPEC. VALUE			UNIT
			MIN.	TYP.	MAX.	
Forward Voltage	V_f	I_F=20*2mA	9.0	10.2	10.8	V
Forward Current	I_F			20*2		mA
Power Dissipation	P_d	I_F=20*2mA		0.384		W
Reverse Voltage	V_r				3.0	V
Reverse Current	I_r					mA
Luminous Intensity	L_V	I_F=20*2mA	6000			cd/m²
Luminous Uniformity	ΔL_V		75	80		%
Chromaticity Coordinate	X	I_F=15mA, Ta=25°C each chip	0.27		0.33	
	Y		0.27		0.33	

Note (7): Operating temperature range Topr -30°C to +70°C; Storage temperature range Tsty -40°C to +85°C.

digital electronic gmbh • Tel. +49 (0) 8221/708-0 Fax. +49 (0) 8221/708-80

All specifications subject to change without notice.

TFT TRANSMISSIVE LCD MODULES

YTS 350ELAK-01-100T

3.5'', 320 X 240 DOTS, 1/240 DUTY

TIMING OF POWER SUPPLY: DATA TRANSACTION TIMING IN PARALLEL RGB (24 BIT) INTERFACE (SYNC MODE)

(a) Horizontal Data Transaction Timing

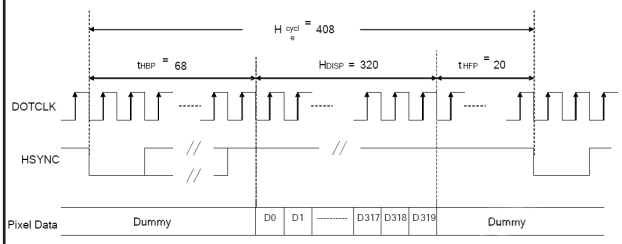

(a) Vertical Data Transaction Timing

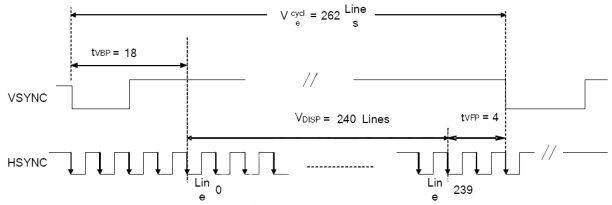

PARAMETER		SYMBOL	MIN.		TYP.		MAX.		UNIT
			24 bit	8 bit	24 bit	8 bit	24 bit	8 bit	
DOTCLK Frequency		f_{DOTCLK}			6.5	19.5	10	30	MHz
DOTCLK Period			100	33.3	154	51.3			ns
Horizontal Frequency (Line)		f_H			14.9		22.35		kHz
Vertical Frequency (Refresh)		f_V			60		90		Hz
Horizontal Back Porch		t_{HBP}			68	204			t_{DOTCLK}
Horizontal Front Porch		t_{HFP}			20	60			t_{DOTCLK}
Horizontal Data Start Point		t_{HBP}			68	204			t_{DOTCLK}
Horizontal Blanking Period		$t_{HBP} + t_{HFP}$			88	264			t_{DOTCLK}
Horizontal Display Area		H_{DISP}			320	960			t_{DOTCLK}
Horizontal Cycle		H_{CYCLE}			408	1224	450	1350	t_{DOTCLK}
Vertical Back Porch		t_{VBP}			18				Lines
Vertical Front Porch		t_{VFP}			4				Lines
Vertical Data Start Point		t_{VBP}			18				Lines
Vertical Blanking Period		$t_{VBP} + t_{VFP}$			22				Lines
Vertical Display Area	NTSC	V_{DISP}			240				Lines
	PAL				280 (PALM=0)				Lines
	PAL				288 (PALM=1)				Lines
Verical Cycle	NTSC	V_{CYCLE}			262		350		Lines
	PAL				313				Lines

SIGNAL TIMING IN DE MODE

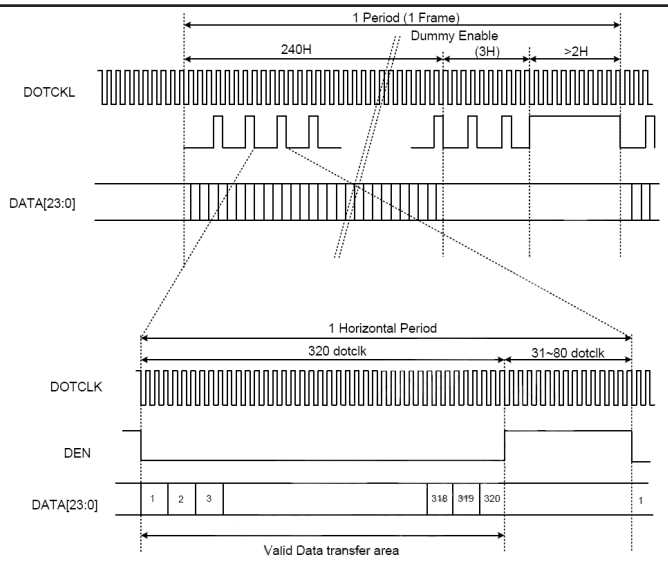

TFT TRANSMISSIVE LCD MODULES

YTS 350ELAK-01-100N

3.5'', 320 X 240 DOTS, 1/240 DUTY

EXTERNAL DIMENSION AND DISPLAY PATTERN

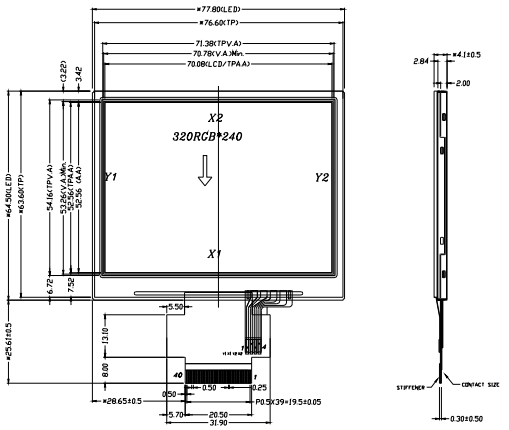

1	K	21	GG2
2	A	22	GG3
3	X2	23	GG4
4	Y2	24	GG5
5	X1	25	GG6
6	Y1	26	GG7
7	RESET	27	RR0
8	CS	28	RR1
9	SCL	29	RR2
10	SDI	30	RR3
11	BB0	31	RR4
12	BB1	32	RR5
13	BB2	33	RR6
14	BB3	34	RR7
15	BB4	35	ENABLE
16	BB5	36	HSYNC
17	BB6	37	VSYNC
18	BB7	38	DOTCLK
19	GG0	39	VDD
20	GG1	40	GND

MECHANICAL DATA

ITEM	SPECIFICATION	UNIT
Module Size (W x H)	77.80 x 64.50 x 3.04	mm
Active Area (W x H)	70.08 x 52.56	mm
Viewing Direction	12:00	o´clock
Number of Dots	320 (RGB) x 240	dots
Colors	16M	

ABSOLUTE MAXIMUM RATINGS

PARAMETER	SYMBOL	MIN.	MAX.	UNIT
Supply Voltage	V_{DD}	-0.3	2.7	V
	V_{DDIO}	-0.3	4.0	V
Input Voltage	V_{CI}	V_{SS}-0.3	5.0	V
Operating Temperature	See page 8			
Storage Temperature				

Note (1): Current Drain per Pin excluding VDD and VSS: 25mA typical.

PIN CONFIGURATION

PIN	SYMBOL	SIGNAL DESCRIPTION
1	LED_K	LED Backlight
2	LED_A	
3	X_2/NC	No Connection
4	Y_2/NC	
5	X_1/NC	
6	Y_1/NC	
7	RESET	Reset Pin
8	CS	Chip Select Pin
9	SCL	Clock Pin of Serial Mode
10	SDI	Data Input Pin in Serial Mode
11-18	BB_0-BB_7	Blue Data
19-26	GG_0-GG_7	Green Data
27-34	RR_0-RR_7	Red Data
35	ENABLE	Display Enable Pin from Controller
36	HSYNC	Line Synchronization Signal
37	VSYNC	Frame Synchronization Signal
38	DOTCLK	Dot-Clock Signal and Oscillator Source
39	V_{DD}	Power Supply
40	GND	Ground

ELECTRICAL CHARACTERISTICS, Ta = 25°C

ITEM	SYMBOL	CONDITION	SPEC. VALUE			UNIT
			MIN.	TYP.	MAX.	
TFT Gate ON Voltage	V_{GH}			15.0		V
TFT Gate OFF Voltage	V_{GL}	Ta=+25°C		-10.0		V
TFT Common Electrode Voltage	V_{comH} V_{comL}		2.5 -2.0	(3.6) (-2.4)	4.5 0	V

Note (2): V_{com} must be adjusted to optimize display quality: cross talk, contrast ratio and etc.
Note (3): V_{GH} is TFT gate operating voltage.
Note (4): V_{GL} is TFT gate operating voltage. The storage capacitance structure of this products is C_{st} (Storage on Common). The low voltage level of V_{GL} signal must be fluctuated with same phase as V_{com}, in case of Storage on Gate structure.
Note (5): Environmental condition: 25°C±5°C.
Note (6): Operating Voltage V_{CC}=3.3V

BACKLIGHTING CHARACTERISTICS, Ta = 25°C, LED

ITEM	SYMBOL	CONDITION	SPEC. VALUE			UNIT
			MIN.	TYP.	MAX.	
Forward Voltage	V_f	I_F=20*2mA	9.0	10.2	10.8	V
Forward Current	I_F			20*2		mA
Power Dissipation	P_d	I_F=20*2mA		0.384		W
Reverse Voltage	V_r				3.0	V
Reverse Current	I_r					mA
Luminous Intensity	L_V	I_F=20*2mA	6000			cd/m²
Luminous Uniformity	ΔL_V		75	80		%
Chromaticity Coordinate	X	I_F=20mA, Ta=25°C each chip	0.27		0.33	
	Y		0.27		0.33	

Note (7): Operating temperature range Topr -30°C to +70°C; Storage temperature range Tsty -40°C to +85°C.

digital electronic gmbh • Tel. +49 (0) 8221/708-0 Fax. +49 (0) 8221/708-80

All specifications subject to change without notice.

TFT TRANSMISSIVE LCD MODULES

YTS 350ELAK-01-100N

3.5'', 320 X 240 DOTS, 1/240 DUTY

TIMING OF POWER SUPPLY: DATA TRANSACTION TIMING IN PARALLEL RGB (24 BIT) INTERFACE (SYNC MODE)

(a) Horizontal Data Transaction Timing

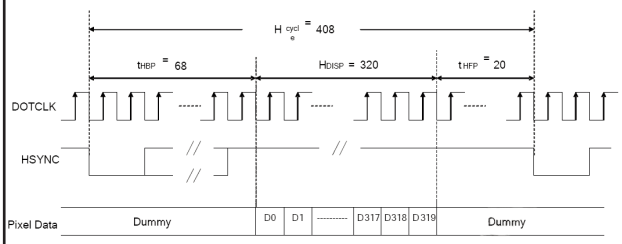

(a) Vertical Data Transaction Timing

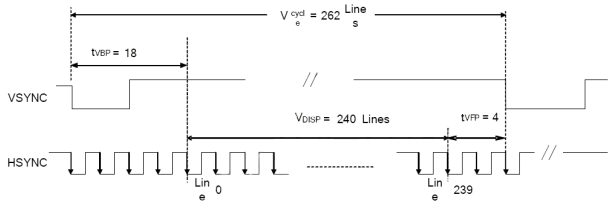

PARAMETER		SYMBOL	MIN.		TYP.		MAX.		UNIT
			24 bit	8 bit	24 bit	8 bit	24 bit	8 bit	
DOTCLK Frequency		f_{DOTCLK}			6.5	19.5	10	30	MHz
DOTCLK Period			100	33.3	154	51.3			ns
Horizontal Frequency (Line)		f_H			14.9		22.35		kHz
Vertical Frequency (Refresh)		f_V			60		90		Hz
Horizontal Back Porch		t_{HBP}			68	204			t_{DOTCLK}
Horizontal Front Porch		t_{HFP}			20	60			t_{DOTCLK}
Horizontal Data Start Point		t_{HBP}			68	204			t_{DOTCLK}
Horizontal Blanking Period		$t_{HBP} + t_{HFP}$			88	264			t_{DOTCLK}
Horizontal Display Area		H_{DISP}			320	960			t_{DOTCLK}
Horizontal Cycle		H_{CYCLE}			408	1224	450	1350	t_{DOTCLK}
Vertical Back Porch		t_{VBP}			18				Lines
Vertical Front Porch		t_{VFP}			4				Lines
Vertical Data Start Point		t_{VBP}			18				Lines
Vertical Blanking Period		$t_{VBP} + t_{VFP}$			22				Lines
Vertical Display Area	NTSC	V_{DISP}			240				Lines
	PAL				280 (PALM=0)				Lines
	PAL				288 (PALM=1)				Lines
Verical Cycle	NTSC	V_{CYCLE}			262		350		Lines
	PAL				313				Lines

SIGNAL TIMING IN DE MODE

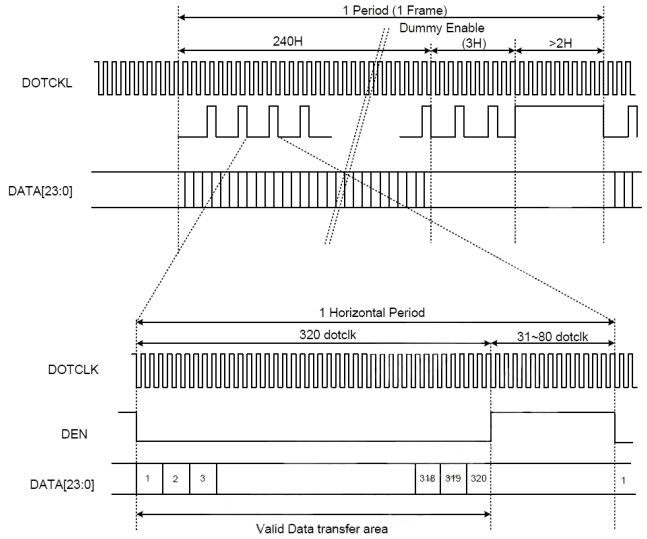

TFT TRANSMISSIVE LCD MODULES

YTS 350ELAJ-01-100T

3.5'', 320 X 240 DOTS, 1/240 DUTY

EXTERNAL DIMENSION AND DISPLAY PATTERN

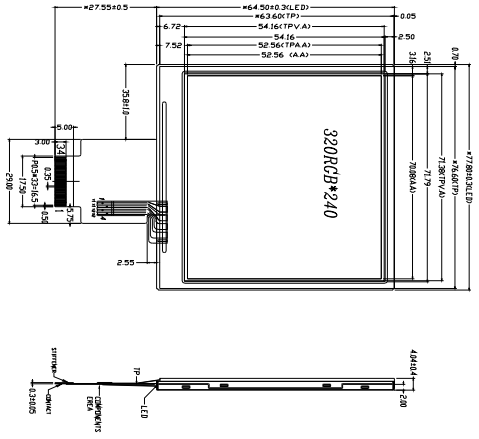

1	LEDK
2	LEDK
3	LEDA
4	LEDA
5	X2
6	Y2
7	X1
8	Y1
9	GND
10	VCC
11	IOVCC
12	GND
13	RESB
14	DC
15	RD
16	WR
17	CS
18	DB15
19	DB14
20	DB13
21	DB12
22	DB11
23	DB10
24	DB9
25	DB8
26	DB7
27	DB6
28	DB5
29	DB4
30	DB3
31	DB2
32	DB1
33	DB0
34	GND

MECHANICAL DATA

ITEM	SPECIFICATION	UNIT
Module Size (W x H)	77.80 x 64.50 x 4.04	mm
Active Area (W x H)	70.08 x 52.56	mm
Viewing Direction	12:00	o´clock
Number of Dots	320 (RGB) x 240	dots
Colors	262K	

ABSOLUTE MAXIMUM RATINGS

PARAMETER	SYMBOL	MIN.	MAX.	UNIT
Supply Voltage	V_{DDIO}	-0.3	4.0	V
Input Voltage	V_{CI}	V_{SS}-0.3	5.0	V
Operating Temperature	See page 8			
Storage Temperature				

Note (1): Current Drain per Pin excluding VDD and VSS: 25mA typical.

PIN CONFIGURATION

PIN	SYMBOL	SIGNAL DESCRIPTION
1	LED_K	LED Backlight
2		
3	LED_A	
4		
5	X_2	Touch Panel
6	Y_2	
7	X_1	
8	Y_1	
9	GND	Ground
10	V_{CC}	Interface I/O Power Supply
11	IOV_{CC}	Power Supply for Analog Circuit
12	GND	Ground
13	RESB	System Reset
14	DC	Data or Command
15	RD	8080-System: RD (Read Strobe Signal)
16	WR	8080-System: WR (Write Strobe Signal)
17	CS	Chip Select
18-33	DB_{15}-DB_0	Data Bus
34	GND	Ground

ELECTRICAL CHARACTERISTICS, Ta=25°C

ITEM	SYMBOL	CONDITION	SPEC. VALUE			UNIT
			MIN.	TYP.	MAX.	
TFT Gate ON Voltage	V_{GH}		+10.0		+16.0	V
TFT Gate OFF Voltage	V_{GL}	Ta=+25°C	-16.0		-9.0	V
TFT Common Electrode Voltage	V_{comH} V_{comL}		2.5 -2.0		+5.0 0	V

Note (2): V_{com} must be adjusted to optimize display quality: cross talk, contrast ratio and etc.
Note (3): V_{GH} is TFT gate operating voltage.
Note (4): V_{GL} is TFT gate operating voltage. The storage capacitance structure of this products is C_{st} (Storage on Common).
Note (5): Environmental condition: 25°C±5°C.
Note (6): TFT frame frequency advise 60 Hz.
Note (7): Operating Voltage V_{CC}=2.5 to 3.3V; IOV_{CC}=1.8 to 3.3V

BACKLIGHTING CHARACTERISTICS, Ta=25°C, LED

ITEM	SYMBOL	CONDITION	SPEC. VALUE			UNIT
			MIN.	TYP.	MAX.	
Forward Voltage	V_f	I_F=20*2mA	9.0	10.2	10.8	V
Forward Current	I_F			20*2		mA
Power Dissipation	P_d	I_F=20*2mA		0.384		W
Reverse Voltage	V_r				3.0	V
Reverse Current	I_r					mA
Luminous Intensity	L_V	I_F=20*2mA	6000			cd/m²
Luminous Uniformity	ΔL_V		75	80		%
Chromaticity Coordinate	X	I_F=20mA, Ta=25°C each chip	0.27		0.33	
	Y		0.27		0.33	

Note (8): Operating temperature range Topr -30°C to +70°C; Storage temperature range Tsty -40°C to +85°C.

digital electronic gmbh • Tel. +49 (0) 8221/708-0 Fax. +49 (0) 8221/708-80

All specifications subject to change without notice.

TFT TRANSMISSIVE LCD MODULES

YTS 350ELAJ-01-100T

3.5'', 320 X 240 DOTS, 1/240 DUTY

INTERFACE TIMING CHARACTERISTICS

Write Cycle

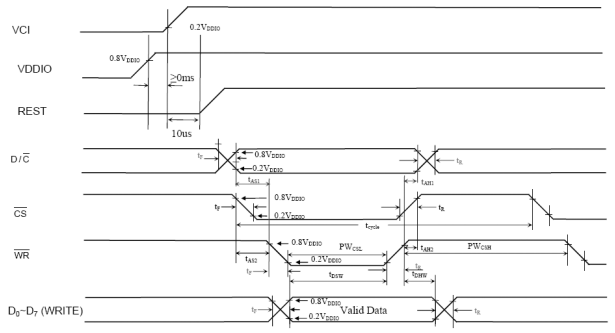

Read Cycle

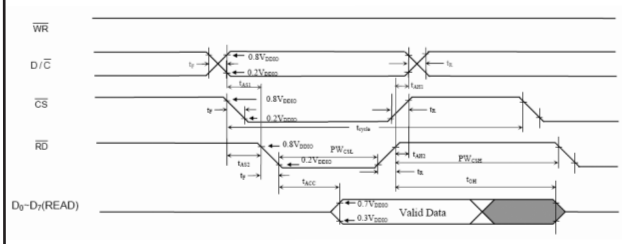

Note (1): It´s recommended that /RD remains high for the whole Write Cycle.

TIMING OF POWER SUPPLY: PARALLEL 8080 TIMING CHARACTERISTICS V_{DDIO}= 1.4V to 3.6V, Ta=-40°C to 85°C

PARAMETER	SYMBOL	MIN.	MAX.	UNIT
Clock Cycle Time (Write Cycle)	t_{CYCLE}	75		ns
Clock Cycle Time (Read Cycle) (Based on V_{OL} / V_{OH} =0.3*V_{DDIO}/0.7*V_{DDIO})		450		ns
Address Setup Time between (R/W) and D/C	t_{AS1}	0		ns
Address Hold Time between (R/W) and D/C	t_{AH1}	0		ns
Address Setup Time between (R/W) and /CS	t_{AS2}	0		ns
Address Hold Time between (R/W) and /CS	t_{AH2}	0		ns
Data Setup Time (D_0 to D_7 Write)	t_{DSW}	5		ns
Data Hold Time (D_0 to D_7 Write)	t_{DHW}	5		ns
Data Access Time (D_0 to D_7 Read)	t_{ACC}	250		ns
Output Hold Time (D_0 to D_7 Read)	t_{OH}	100		ns
Pulse Width /CS Low (Write Cycle)	PW_{CSL}	40		ns
Pulse Width /CS High (Write Cycle)	PW_{CSH}	25		ns
Pulse Width /CS Low (Read Cycle)	PW_{CSL}	500		ns
Pulse Width /CS High (Read Cycle)	PW_{CSH}	500		ns
Rise Time	t_R		15	ns
Fall Time	t_F		15	ns

TFT TRANSMISSIVE LCD MODULES

YTS 430ILAC-01-100T

4.3'', 480 X 272 DOTS, 1/272 DUTY

EXTERNAL DIMENSION AND DISPLAY PATTERN

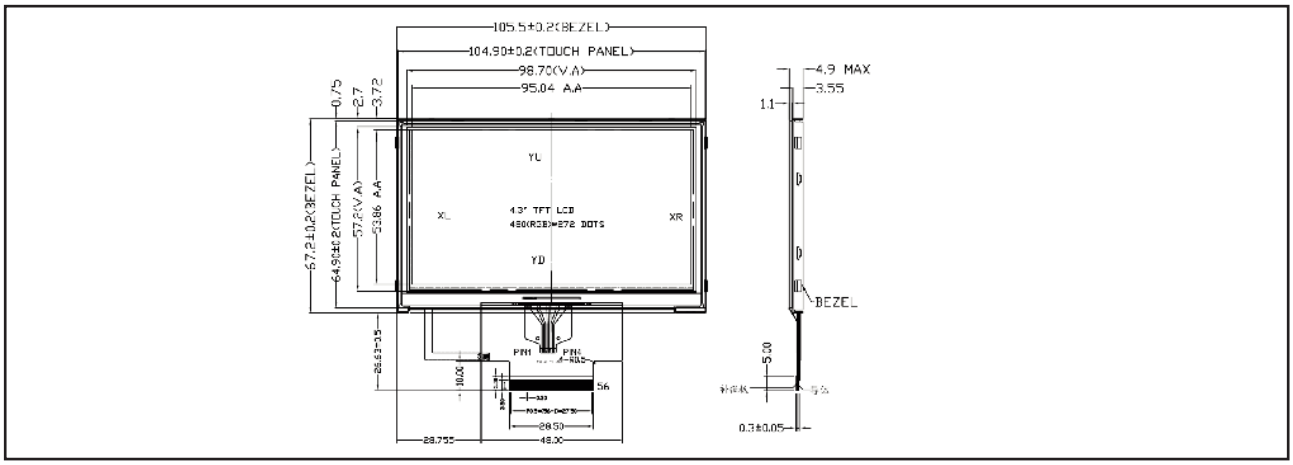

MECHANICAL DATA

ITEM	SPECIFICATION	UNIT
Module Size (W x H)	105.5 x 67.2 x 4.9	mm
Active Area (W x H)	95.04 x 53.86	mm
Viewing Direction	12:00	o´clock
Number of Dots	480 (RGB) x 272	dots
Colors	16M	

PIN CONFIGURATION

PIN	SYMBOL	SIGNAL DESCRIPTION
1	NC	No Connection
2	LED_K	LED Power
3	LED_A	LED Power
4-5	NC	No Connection
6	GND	Ground
7	V_{CC}	Logic Regulator Power Supply
8	CPWM	Duty Cycle Control Signal of CABC Function
9	SDO	Data Output Pin in Serial Mode
10	SDI	Data Input in Serial Mode. Internal Pull High
11	SDL	Clock Pin of Serial Interface
12	CS	Chip Select Pin of Serial Interface
13	ENABLE	Input Data Enable Control
14	V_{SYNC}	Verical SYNC Input with Negative Polarity
15	H_{SYNC}	Horizontal SYNC Input with Negative Polarity
16	DISPLAY	Display ON/OFF Mode Control
17	DOTCLK	Clock Signal for Data Latching and Internal Counter of the Timing Controller.
18-33	GND	Ground
19-26	B_7-B_0	Blue Data Bit
27-34	G_7-G_0	Green Data Bit
35-42	R_7-R_0	Red Data Bit
43	GND	Ground
44	RESET	Active Low Global Reset Signal Input
45	IOV_{CC}	Interface I/O Power Supply
46	V_{CI}	Liquid Crystal Analog Circuit Power Supply
47	GND	Ground
48	DRV_1	Power Transistor Gate Signal for the Boost Converter 1
49	VFB_1	Main Boost Regulator Feedback Input 1
50	GND	Ground
51-54	YU, XL, YD, XR	The Pins of Touch Panel
55	GND	Ground
56	NC	No Connection

ABSOLUTE MAXIMUM RATINGS

PARAMETER	SYMBOL	MIN.	MAX.	UNIT
Logic Power Supply	V_{DDIO}	-0.3	4.0	V
Booster Power Supply	V_{CI}	-0.3	5.0	V
Analog Circuit Power Supply	V_{CIP}	-0.3	5.0	V
Power Supply of Analog Block and V_{LCD}/V_{DC} Regulation	V_{CIX2J}	-0.3	6.0	V
Power Pin for Internal Logic Circuit	V_{DD}	-0.3	2.7	V
Using External V_{GH} - V_{GL}	V_{GH} - V_{GL}	-0.3	45.0	V
Operating Temperature	See page 8			
Storage Temperature				

ELECTRICAL CHARACTERISTICS, Ta=25°C

ITEM	SYMBOL	CONDITION	SPEC. VALUE			UNIT
			MIN.	TYP.	MAX.	
TFT Gate ON Voltage	V_{GH}			15.0		V
TFT Gate OFF Voltage	V_{GL}	Ta=+25°C		-10.0		V
TFT Common Electrode Voltage	V_{comH} V_{comL}			4.2 -1.4		V

Note (1): V_{com} must be adjusted to optimize display quality: cross talk, contrast ratio and etc.
Note (2): V_{GH} is TFT gate operating voltage.
Note (3): V_{GL} is TFT gate operating voltage.
Note (4): Environmental condition: 25°C±5°C.
Note (5): Reference waveform for panel light on is as below: gate width is 1.5 ms. V_{GH} / V_{DH} / V_{GL} / V_{COM} are referred to driver IC specification.
Note (6): Operating Voltage V_{CC}=3.3V

BACKLIGHTING CHARACTERISTICS, Ta=25°C, LED

ITEM	SYMBOL	CONDITION	SPEC. VALUE			UNIT
			MIN.	TYP.	MAX.	
Forward Voltage	V_f	I_F=20mA; - Aperture: 1°, 12 Point; - The Measurement Instrument is BM-7; -Average = min/max*100%	18.6	19.8	21.0	V
Reverse Current	I_r				15.0	mA
Luminous Intensity	L_V		5200			cd/m²
Average			75			%
Chromaticity Coordinate	X		0.245		0.295	
	Y		0.245		0.295	

digital electronic gmbh • Tel. +49 (0) 8221/708-0 Fax. +49 (0) 8221/708-80

All specifications subject to change without notice.

TFT TRANSMISSIVE LCD MODULES

YTS 430ILAC-01-100T

4.3'', 480 X 272 DOTS, 1/272 DUTY

AC CHARACTERISTICS

V_{DDIO}=1.8 to 3.6V, DV_{SS}=0V, Ta=25°C, 480 RGB x 272					
PARAMETER	SYMBOL	MIN.	TYP.	MAX.	UNIT
Clock Cycle	f_{CLK} (1)		9		MHz
H_{SYNC} Cycle	1/th		17.14		kHz
V_{SYNC} Cycle	1/tv		59.94		Hz
Horizontal Signal					
Horizontal Cycle	th	525	525	605	CLK
Horizontal Display Period	tdh	480	480	480	CLK
Horizontal Front Porch	thf	2	2	82	CLK
Horizontal Pulse Width	thp (2)	2	41	41	CLK
Horizontal Back Porch	thb (2)	2	2	41	CLK
Vertical Signal					
Vertical Cycle	tv	285	286	399	H (1)
Vertical Display Period	tvd	272	272	272	H (1)
Vertical Front Porch	tvf	1	2	227	H (1)
Vertical Pulse Width	tvp (2)	1	10	11	H (1)
Vertical Back Porch	tvb (2)	1	2	11	H (1)

Note (1): Unit: CLK=1/f_{CLK}, H=th
Note (2): It´s necessary to keep tvp+tvb=12 and thp+thb=43 in Sync Mode. DE Mode is unnecessary to keep it.

Parallel RGB Input Timing

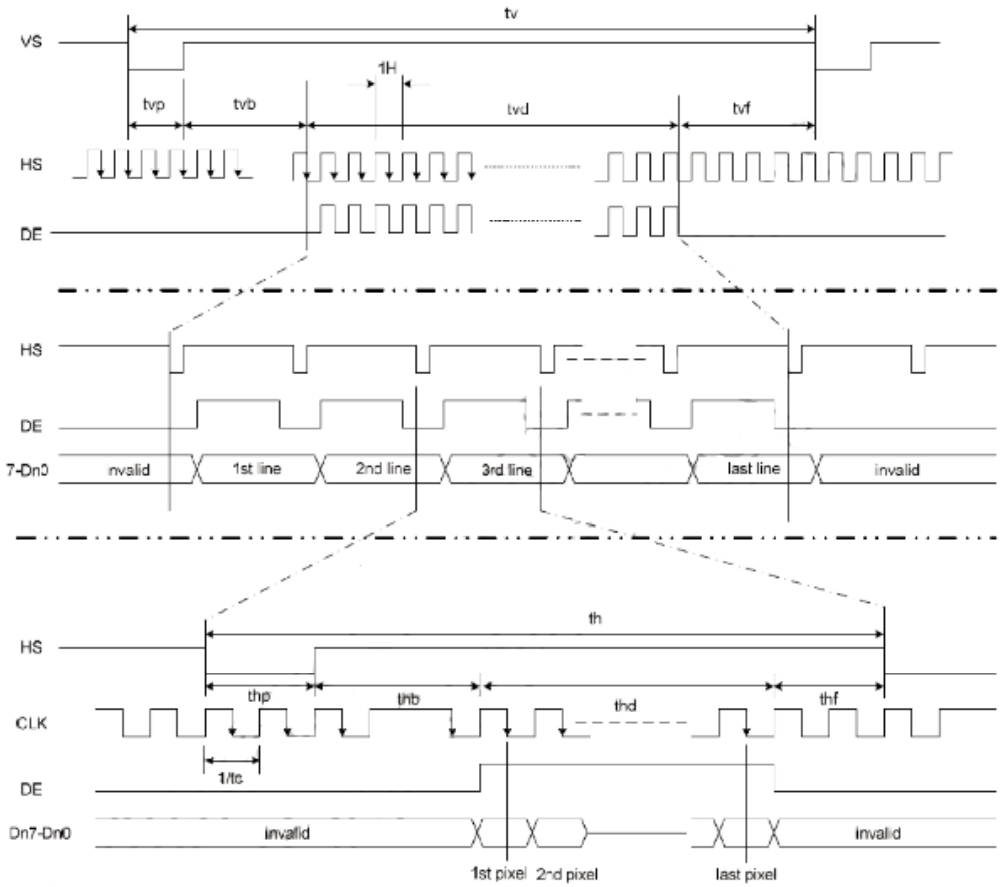

TFT TRANSMISSIVE LCD MODULES

YTS 570ELAA-01-100T

5.7'', 320 X 240 DOTS, 1/240 DUTY

EXTERNAL DIMENSION AND DISPLAY PATTERN

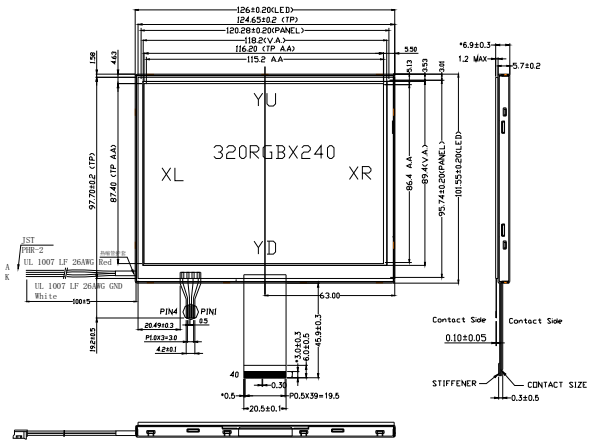

1	POL	21	G7
2	RESET	22	R0
3	SPENA	23	R1
4	SPCK	24	R2
5	SPDA	25	R3
6	B0	26	R4
7	B1	27	R5
8	B2	28	R6
9	B3	29	R7
10	B4	30	IHS
11	B5	31	IVS
12	B6	32	CLK
13	B7	33	VDD
14	G0	34	VCC
15	G1	35	VGL
16	G2	36	VGH
17	G3	37	VCOM
18	G4	38	DEN
19	G5	39	GND
20	G6	40	AVSS

MECHANICAL DATA

ITEM	SPECIFICATION	UNIT
Module Size (W x H)	126.0 x 101.55 x 6.9	mm
Active Area (W x H)	118.26 x 89.40	mm
Viewing Direction	12:00	o´clock
Number of Dots	320 (RGB) x 240	dots
Colors	16M	

ABSOLUTE MAXIMUM RATINGS

PARAMETER	SYMBOL	MIN.	MAX.	UNIT
Supply Voltage (1)	V_{CC}	-0.3	7.0	V
Supply Voltage (2)	V_{DD}	-0.3	7.0	V
Logic Output Voltage	V_{OUT}	-0.3	7.0	
Input Voltage	V_{IN}	-0.3	V_{DD}+0.3	V
Operating Temperature	See page 8			
Storage Temperature				

Note (1): All of the voltage listed above are with respective to GND=V_{SS}=0V
Note (2): Device is subjest to be dmaged permanently if stresses beyond those absolute maximum ratings listed above.

PIN CONFIGURATION

PIN	SYMBOL	I/O	SIGNAL DESCRIPTION
1	POL	O	Polarity Signal to Monitor V_{COM} Signal
2	RESET	I	Hardware Reset
3	SPENA	I	The Pin of Touch Panel
4	SPCK	I	Serial Port Clock
5	SPDA	I/O	Serial Port Data Input/Output
6-13	B_0-B_7	I	Blue Data Bit 0 to Blue Data Bit 7
14-21	G_0-G_7	I	Green Data Bit 0 to Green Data Bit 7
22-29	R_0-R_7	I	Red Data Bit 0 to Red Data Bit 7
30	IHS	I	Horizontal SYNC Input in Digital RGB Mode
31	IVS	I	Vertical SYNC Input in Digital RGB Mode
32	CLK	I	Clock Signal
33	V_{DD}	I	Analog Power
34	V_{CC}	I	Digital Power
35	V_{GL}	O	Negative Power Output Pin for Gate Driver
36	V_{GH}	O	Positive Power Output Pin for Gate Driver
37	V_{COM}	O	Power Supply for the TFT Display Common Electrode
38	DEN	I	Input Data Enable Control
39	GND	I	Digital Ground
40	AV_{SS}	I	Analog Ground

ELECTRICAL CHARACTERISTICS, Ta = 25°C

ITEM	SYMBOL	CONDITION	SPEC. VALUE			UNIT
			MIN.	TYP.	MAX.	
TFT Gate ON Voltage	V_{GH}			15.0		V
TFT Gate OFF Voltage	V_{GL}	Ta=+25°C		-10.0		V
TFT Common Electrode Voltage	V_{comH} V_{comL}		2.5 -2.0		5.5 0	V

Note (3): V_{com} must be adjusted to optimize display quality: cross talk, contrast ratio and etc.
Note (4): V_{GH} is TFT gate operating voltage.
Note (5): V_{GL} is TFT gate operating voltage.
Note (6): Environmental condition: 25°C±5°C.
Note (7): Reference waveform for panel light on is s below: Gate width is 1.5 ms. V_{GH} / V_{DH} / V_{GL} / V_{COM} are referred to driver IC specification.
Note (8): Operating Voltage V_{CC}=5.0V

BACKLIGHTING CHARACTERISTICS, Ta = 25°C, LED

ITEM	SYMBOL	CONDITION	SPEC. VALUE			UNIT
			MIN.	TYP.	MAX.	
Forward Voltage	V_f	I_F=Typ.	9.0	9.6	10.2	V
Forward Current	I_F			140		mA
Luminous Intensity	L_V	I_F=Typ./Chip	4500	5000	5500	cd/m²
Luminous Uniformity	ΔL_V	Ta=25°C	75			%
Chromaticity Coordinate	X		0.27	0.292	0.287	
	Y		0.27	0.270	0.310	

Note (9): Operating temperature range Topr -30°C to +70°C; Storage temperature range Tsty -40°C to +85°C.

digital electronic gmbh • Tel. +49 (0) 8221/708-0 Fax. +49 (0) 8221/708-80
All specifications subject to change without notice.

TFT TRANSMISSIVE LCD MODULES

YTS 570ELAA-01-100T

5.7'', 320 X 240 DOTS, 1/240 DUTY

TIMING OF POWER SUPPLY: SIGNAL TIMING IN DE MODE

HS Pulse WidthCLK, ENABLE and DATA Timing Waveforms

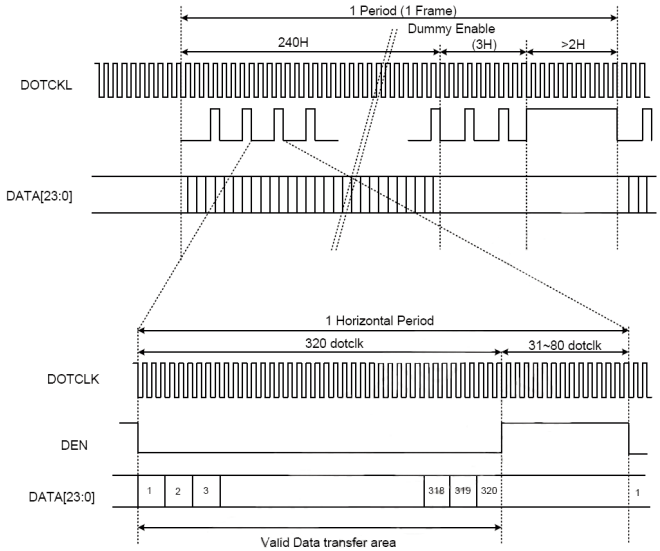

TFT TRANSMISSIVE LCD MODULES

YTS 700RLAB-01-100N

7'', 800 X 480 DOTS, 1/480 DUTY

EXTERNAL DIMENSION AND DISPLAY PATTERN

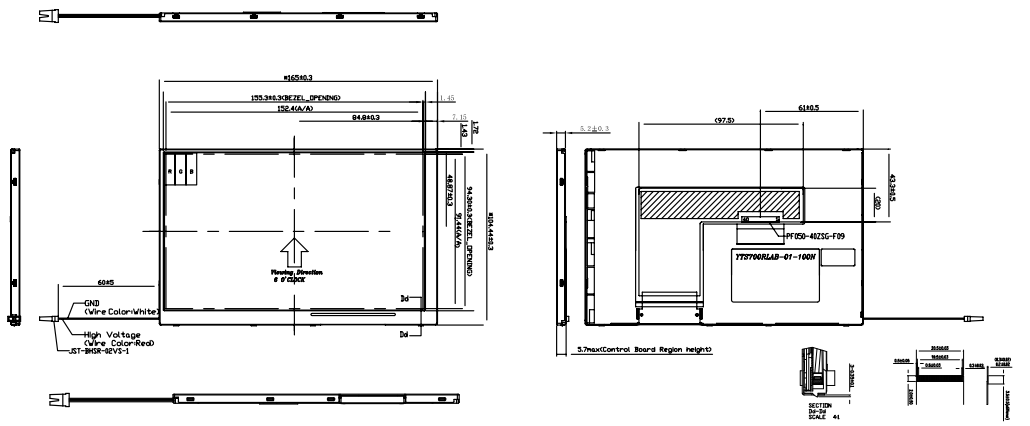

PIN	SYMBOL	PIN	SYMBOL
1	GND	21	G5
2	GND	22	G4
3	NC	23	G3
4	VCC	24	GND
5	VCC	25	G2
6	VCC	26	G1
7	VCC	27	G0
8	NC	28	GND
9	DE	29	R5
10	GND	30	R4
11	GND	31	R3
12	GND	32	GND
13	B5	33	R2
14	B4	34	R1
15	B3	35	R0
16	GND	36	GND
17	B2	37	GND
18	B1	38	DCLK
19	B0	39	GND
20	GND	40	GND

Pin No.	Symbol	Wire Color
1	VLEDA	Red
2	VLEDK	White

MECHANICAL DATA

ITEM	SPECIFICATION	UNIT
Module Size (W x H x D)	165.0 x 104.44 x 5.2	mm
Active Area (W x H)	152.4 x 91.44	mm
Pixel Size	190.5 x 190.5	um
Viewing Direction	6:00	o´clock
Number of Dots	800 (RGB) x 480	dots
Color Sturation (NTSC)	45	%
Colors	16M	

PIN CONFIGURATION

PIN	SYMBOL	SIGNAL DESCRIPTION
1-2	GND	Power Ground
3	NC	No Connection
4-7	V_{CC}	Power Supply for Digital Circuit
8	NC	No Connection
9	DE	Data Enable
10-12	GND	Power Ground
13	B_5	Blue Data 5 (MSB)
14	B_4	Blue Data 4
15	B_3	Blue Data 3
16	GND	Power Ground
17	B_2	Blue Data 2
18	B_1	Blue Data 1
19	B_0	Blue Data 0 (LSB)
20	GND	Power Ground
21	G_5	Green Data 5 (MSB)
22	G_4	Green Data 4
23	G_3	Green Data 3
24	GND	Power Ground
25	G_2	Green Data 2
26	G_1	Green Data 1
27	G_0	Green Data 0 (LSB)
28	GND	Power Ground
29	R_5	Red Data 5 (MSB)
30	R_4	Red Data 4
31	R_3	Red Data 3
32	GND	Power Ground
33	R_2	Red Data 2
34	R_1	Red Data 1
35	R_0	Red Data 0 (LSB)
36-37	GND	Power Ground
38	DCLK	Clock Signals; Latch Data at the Falling Edge
39-40	GND	Power Ground

ABSOLUTE MAXIMUM RATINGS GND=0

PARAMETER	SYMBOL	MIN.	MAX.	UNIT
Power Voltage	V_{CC}	-0.3	6.0	V
Input Logic Voltage (1)	V_I	-0.3	V_{CC}+0.3	V
Operating Temperature	See page 8			
Storage Temperature				

Note (1): DCLK, DE, R_0 to R_5, G_0 to G_5, B_0 to B_5.

ELECTRICAL CHARACTERISTICS, Ta=25°C

ITEM	SYMBOL	CONDITION	SPEC. VALUE			UNIT
			MIN.	TYP.	MAX.	
Power Supply Voltage	V_{CC}		3.0	3.3	3.6	V
Input Logic High Level (2)	V_{IH}		0.7V_{CC}		V_{CC}	V
Input Logic Low Level (2)	V_{IL}		0		0.3V_{CC}	V

Note (2): DCLK, DE, R_0 to R_5, G_0 to G_5, B_0 to B_5.

BLOCK DIAGRAM

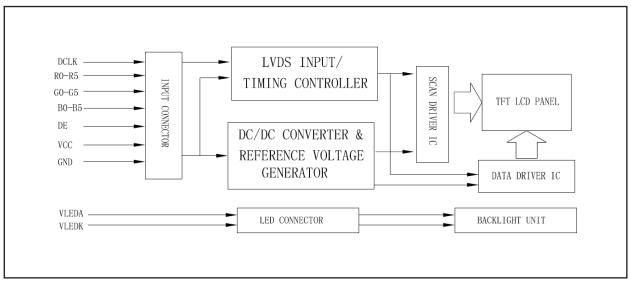

BACKLIGHTING CHARACTERISTICS, Ta=25°C, LED

ITEM	SYMBOL	CONDITION	SPEC. VALUE			UNIT
			MIN.	TYP.	MAX.	
LED Current (3)	I_{LED}			160.0		mA
LED Voltage	V_{LED}			9.9		V
LED Life Time (4)	L_V		10000	20000		hr

Note (3): There are 8 groups LED shown as below, V_{LED}=9.9V; I_{LED}=160mA.
Note (4): Brightness to be decreased to 50% of the initial value.
Note (5): Pin 1 = V_{LED_A} = Red, LED_Anode; Pin 2 = V_{LED_K} = White, LED_Cathode.

digital electronic gmbh • Tel. +49 (0) 8221/708-0 Fax. +49 (0) 8221/708-80

All specifications subject to change without notice.

TFT TRANSMISSIVE LCD MODULES

YTS 700RLAB-01-100N

7'', 800 X 480 DOTS, 1/480 DUTY

AC CHARACTERISTICS

PARAMETER	SYMBOL	MIN.	TYP.	MAX.	UNIT
Data Setup Time	T_{DSU}	6			ns
Data Hold Time	T_{DHD}	6			ns
DE Setup Time	T_{ESU}	6			ns
CLK Frequency	F_{CPH}	29.40	33.26	42.48	MHz
CLK Period	T_{CPH}	23.54	30.06	34.01	ns
CLK Pulse Duty	T_{CWH}	40	50	60	%
	T_{CWL}	40	50	60	%
DE Period	$T_{DEH}+T_{DEL}$	1000	1056	1200	T_{CPH}
DE Pulse Width	T_{DEH}		800		T_{CPH}
DE Frame Blanking	T_{DEB}	10	45	110	$T_{DEH}+T_{DEL}$
DE Frame Width	T_{DE}		480		$T_{DEH}+T_{DEL}$

Clock and Data Input Waveform

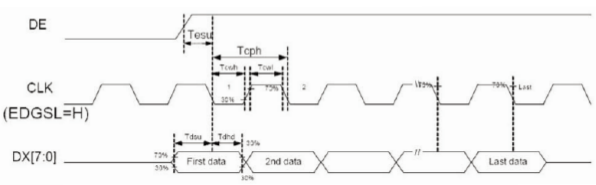

DATA INPUT FORMAT

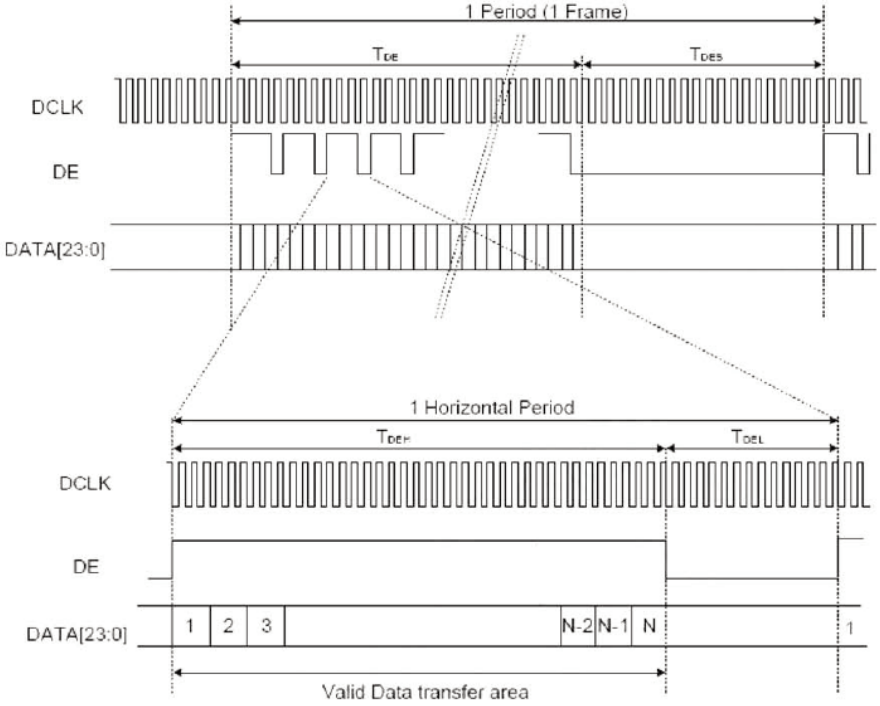

TFT TRANSMISSIVE LCD MODULES

YTS 700RLAB-01-100T

7'', 800 X 480 DOTS, 1/480 DUTY

EXTERNAL DIMENSION AND DISPLAY PATTERN

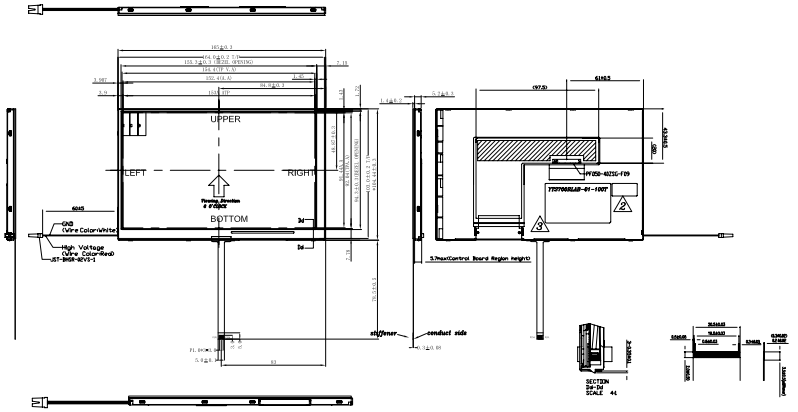

PIN	SYMBOL	PIN	SYMBOL
1	GND	21	G5
2	GND	22	G4
3	NC	23	G3
4	VCC	24	GND
5	VCC	25	G2
6	VCC	26	G1
7	VCC	27	G0
8	NC	28	GND
9	DE	29	R5
10	GND	30	R4
11	GND	31	R3
12	GND	32	GND
13	R5	33	R2
14	R4	34	R1
15	R3	35	R0
16	GND	36	GND
17	R2	37	GND
18	R1	38	DCLK
19	R0	39	GND
20	GND	40	GND

Pin No.	Symbol	Wire Color
1	VLEDA	Red
2	VLEDK	White

MECHANICAL DATA

ITEM	SPECIFICATION	UNIT
Module Size (W x H x D)	165.0 x 104.44 x 6.6	mm
Active Area (W x H)	152.4 x 91.44	mm
Pixel Size	190.5 x 190.5	um
Viewing Direction	6:00	o´clock
Number of Dots	800 (RGB) x 480	dots
Color Sturation (NTSC)	45	%
Colors	16M	

PIN CONFIGURATION

PIN	SYMBOL	SIGNAL DESCRIPTION
1-2	GND	Power Ground
3	NC	No Connection
4-7	V_{CC}	Power Supply for Digital Circuit
8	NC	No Connection
9	DE	Data Enable
10-12	GND	Power Ground
13	B_5	Blue Data 5 (MSB)
14	B_4	Blue Data 4
15	B_3	Blue Data 3
16	GND	Power Ground
17	B_2	Blue Data 2
18	B_1	Blue Data 1
19	B_0	Blue Data 0 (LSB)
20	GND	Power Ground
21	G_5	Green Data 5 (MSB)
22	G_4	Green Data 4
23	G_3	Green Data 3
24	GND	Power Ground
25	G_2	Green Data 2
26	G_1	Green Data 1
27	G_0	Green Data 0 (LSB)
28	GND	Power Ground
29	R_5	Red Data 5 (MSB)
30	R_4	Red Data 4
31	R_3	Red Data 3
32	GND	Power Ground
33	R_2	Red Data 2
34	R_1	Red Data 1
35	R_0	Red Data 0 (LSB)
36-37	GND	Power Ground
38	DCLK	Clock Signals; Latch Data at the Falling Edge
39-40	GND	Power Ground

ABSOLUTE MAXIMUM RATINGS

PARAMETER	SYMBOL	MIN.	MAX.	UNIT
Power Voltage	V_{CC}	-0.3	6.0	V
Input Logic Voltage (1)	V_I	-0.3	V_{CC} +0.3	V
Operating Temperature	See page 8			
Storage Temperature				

Note (1): DCLK, DE, R_0 to R_5, G_0 to G_5, B_0 to B_5.

ELECTRICAL CHARACTERISTICS, Ta = 25°C

ITEM	SYMBOL	CONDITION	SPEC. VALUE			UNIT
			MIN.	TYP.	MAX.	
Power Supply Voltage	V_{CC}		3.0	3.3	3.6	V
Input Logic High Level (2)	V_{IH}		0.7V_{CC}		V_{CC}	V
Input Logic Low Level (2)	V_{IL}		0		0.3V_{CC}	V

Note (2): DCLK, DE, R_0 to R_5, G_0 to G_5, B_0 to B_5.

BLOCK DIAGRAM

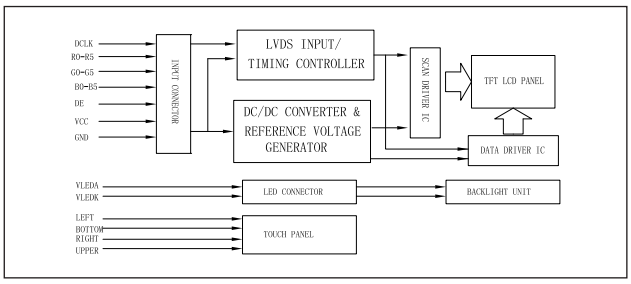

BACKLIGHTING CHARACTERISTICS, Ta = 25°C, LED

ITEM	SYMBOL	CONDITION	SPEC. VALUE			UNIT
			MIN.	TYP.	MAX.	
LED Current (3)	I_{LED}			160.0		mA
LED Voltage	V_{LED}			9.9		V
LED Life Time (4)	L_V		10000	20000		hr

Note (3): There are 8 groups LED shown as below, V_{LED}=9.9V; I_{LED}=160mA.
Note (4): Brightness to be decreased to 50% of the initial value.
Note (5): Pin 1 = V_{LED_A} = Red, LED_Anode; Pin 2 = V_{LED_K} = White, LED_Cathode.

digital electronic gmbh • Tel. +49 (0) 8221/708-0 Fax. +49 (0) 8221/708-80

All specifications subject to change without notice.

TFT TRANSMISSIVE LCD MODULES

YTS 700RLAB-01-100T

7'', 800 X 480 DOTS, 1/480 DUTY

AC CHARACTERISTICS

PARAMETER	SYMBOL	MIN.	TYP.	MAX.	UNIT
Data Setup Time	T_{DSU}	6			ns
Data Hold Time	T_{DHD}	6			ns
DE Setup Time	T_{ESU}	6			ns
CLK Frequency	F_{CPH}	29.40	33.26	42.48	MHz
CLK Period	T_{CPH}	23.54	30.06	34.01	ns
CLK Pulse Duty	T_{CWH}	40	50	60	%
	T_{CWL}	40	50	60	%
DE Period	$T_{DEH}+T_{DEL}$	1000	1056	1200	T_{CPH}
DE Pulse Width	T_{DEH}		800		T_{CPH}
DE Frame Blanking	T_{DEB}	10	45	110	$T_{DEH}+T_{DEL}$
DE Frame Width	T_{DE}		480		$T_{DEH}+T_{DEL}$

Clock and Data Input Waveform

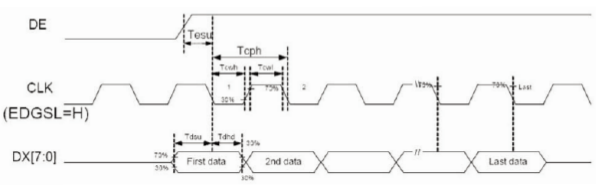

DATA INPUT FORMAT

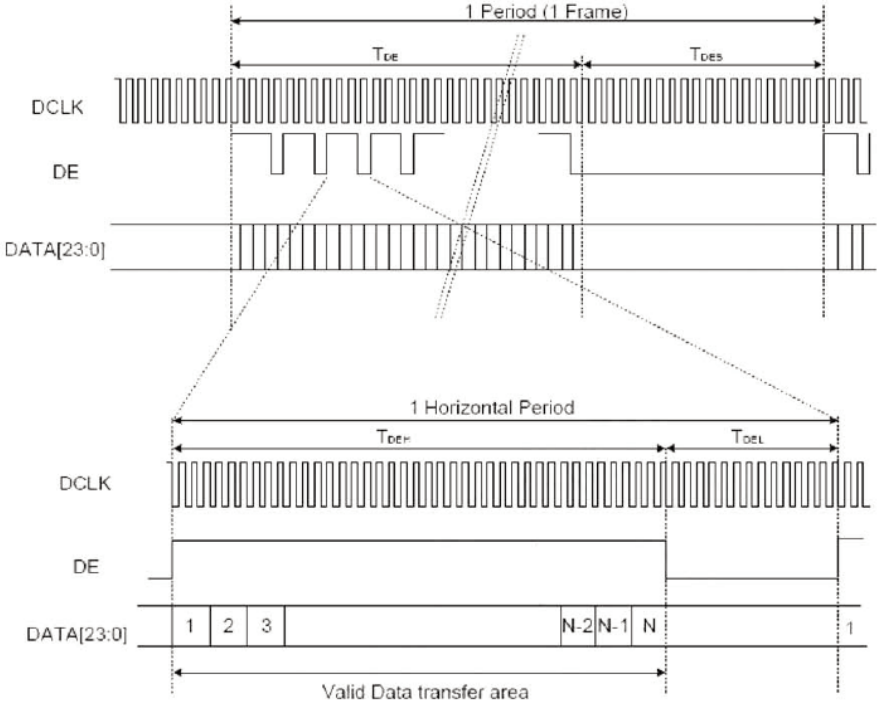

TFT TRANSMISSIVE LCD MODULES

YTS 700RLAB-02-103N

7'', 800 X 480 DOTS, 1/480 DUTY

EXTERNAL DIMENSION AND DISPLAY PATTERN

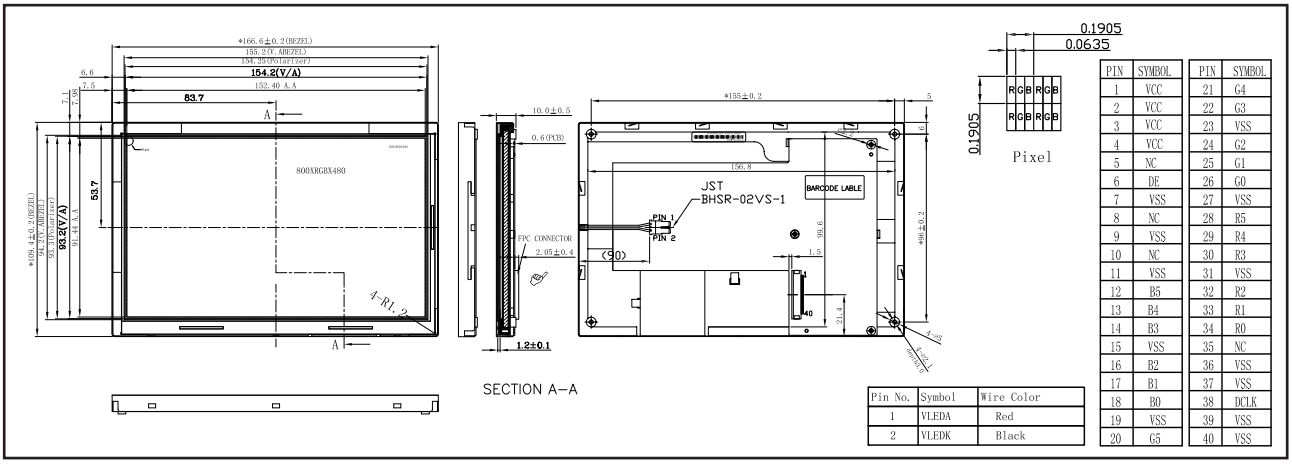

Pin No.	Symbol	Wire Color
1	VLEDA	Red
2	VLEDK	Black

PIN	SYMBOL	PIN	SYMBOL
1	VCC	21	G4
2	VCC	22	G3
3	VCC	23	VSS
4	VCC	24	G2
5	NC	25	G1
6	DE	26	G0
7	VSS	27	VSS
8	NC	28	R5
9	VSS	29	R4
10	NC	30	R3
11	VSS	31	VSS
12	B5	32	R2
13	B4	33	R1
14	B3	34	R0
15	VSS	35	NC
16	B2	36	VSS
17	B1	37	VSS
18	B0	38	DCLK
19	VSS	39	VSS
20	G5	40	VSS

MECHANICAL DATA

ITEM	SPECIFICATION	UNIT
Module Size (W x H)	166.6 x 109.4 x 10.0	mm
Active Area (W x H)	152.4 x 91.44	mm
Viewing Direction	6:00	o´clock
Number of Dots	800 (RGB) x 480	dots
Color Sturation (NTSC)	16M	%

PIN CONFIGURATION

PIN	SYMBOL	I/O	SIGNAL DESCRIPTION
1-4	V_{CC}	I	+3.3V Power Supply
5	NC	I	No Connection
6	DE	I	Input Data Enable Control
7	V_{SS}	I	Ground
8	NC	I	No Connection
9	V_{SS}	I	Ground
10	NC	I	No Connection
11	V_{SS}	I	Ground
12	B_5	I	Blue Data 5 (MSB)
13	B_4	I	Blue Data 4
14	B_3	I	Blue Data 3
15	V_{SS}	I	Ground
16	B_2	I	Blue Data 2
17	B_1	I	Blue Data 1
18	B_0	I	Blue Data 0 (LSB)
19	V_{SS}	I	Ground
20	G_5	I	Green Data 5 (MSB)
21	G_4	I	Green Data 4
22	G_3	I	Green Data 3
23	V_{SS}	I	Ground
24	G_2	I	Green Data 2
25	G_1	I	Green Data 1
26	G_0	I	Green Data 0 (LSB)
27	V_{SS}	I	Ground
28	R_5	I	Red Data 5 (MSB)
29	R_4	I	Red Data 4
30	R_3	I	Red Data 3
31	GND	I	Ground
32	R_2	I	Red Data 2
33	R_1	I	Red Data 1
34	R_0	I	Red Data 0 (LSB)
35	NC	I	No Connection
36-37	V_{SS}	I	Ground
38	DCLK	I	Dot Clock
39-40	V_{SS}	I	Ground

ABSOLUTE MAXIMUM RATINGS

PARAMETER	SYMBOL	MIN.	MAX.	UNIT
Power Supply Voltage (1)	V_{CC}	-0.3	7.0	V
Power Supply Voltage (2)	V_{DDA}	-0.3	13.5	V
Logic Output oltage	V_{OUT}	-0.3	7.0	V
Input Voltage	V_{IN}	-0.3	V_{DDA}+0.3	V
Operating Temperature	See page 8			
Storage Temperature				

Note (1): All of the voltage listed above are with respective to GND=V_{SSA}=0V
Note (2): Device is subject to be dmaged permanently if stresses beyond those absolute maximum ratings listed above.

ELECTRICAL CHARACTERISTICS, Ta = 25°C

ITEM	SYMBOL	CONDITION	SPEC. VALUE			UNIT
			MIN.	TYP.	MAX.	
TFT Gate ON Voltage	V_{GH}		16.0	18.0	19.0	V
TFT Gate OFF Voltage	V_{GL}	Ta=+25°C	-7.0	-6.0	-5.0	V
TFT Common Electrode Voltage	V_{comDC}		4.5	4.6	5.1	V

Note (3): V_{com} must be adjusted to optimize display quality: cross talk, contrast ratio and etc.
Note (4): V_{GH} is TFT gate operating voltage.
Note (5): V_{GL} is TFT gate operating voltage.
Note (6): Environmental condition: 25°C±5°C.
Note (7): Digital Power Input of Driver IC: V_{CC} min. ≥ 3.2V
Note (8): Operating Voltage V_{CC}=3.3V

BACKLIGHTING CHARACTERISTICS, Ta = 25°C, LED

ITEM	SYMBOL	CONDITION	SPEC. VALUE			UNIT
			MIN.	TYP.	MAX.	
Forward Voltage	V_f	I_F=200mA	9.0	9.9	10.5	V
Forward Current	I_F			200		mA
Power Dissipation	P_d			1.98		W
Luminous Intensity	L_V	I_F=200mA	3800	4000		cd/m²
Permeation LCD	I_V		450			cd/m²
Luminous Uniformity	ΔL_V		75	80		%
Chromaticity Coordinate	X	I_F=20mA, Ta=25°C each chip	0.28	0.31	0.34	
	Y		0.28	0.31	0.34	

Note (9): Operating temperature range Topr -20°C to +70°C; Storage temperature range Tsty -30°C to +80°C.
Note (10): Pin 1 = V_{LED_A} = Red, LED_Anode; Pin 2 = V_{LED_K} = Black, LED_Cathode.

digital electronic gmbh • Tel. +49 (0) 8221/708-0 Fax. +49 (0) 8221/708-80
All specifications subject to change without notice.

TFT TRANSMISSIVE LCD MODULES

YTS 700RLAB-02-103N

7'', 800 X 480 DOTS, 1/480 DUTY

TIMING OF POWER SUPPLY: SYNC MODE

PARAMETER	SYMBOL	MIN.	TYP.	MAX.	UNIT
CLK Frequency	F_{CPH}		33.26		MHz
CLK Period	T_{CPH}		30.06		ns
CLK Pulse Duty	T_{CWH}	40	50	60	%
HS Period	T_H		1056		T_{CPH}
HS Pulse Width	T_{WH}	1	128		T_{CPH}
HS-first Horizontal Data Time	T_{HS}	STHD [7;0] +88 (1)			T_{CPH}
HS Active Time	T_{HA}		800		T_{CPH}
VS Period	T_V		525		T_H
VS Pulse Width	T_{WV}	1	2		T_H
VS DE Time	T_{VS}	STVD [6;0] +8			T_H
VS Active Time	T_{VA}		480		T_H

Note (1): $T_{HS} + T_{HA} < T_H$.

TIMING OF POWER SUPPLY: DE MODE

PARAMETER	SYMBOL	MIN.	TYP.	MAX.	UNIT
CLK Frequency	F_{CPH}		33.26		MHz
CLK Period	T_{CPH}		30.06		ns
CLK Pulse Duty	T_{CWH}	40	50	60	%
DE Period	$T_{DEH} + T_{DEL}$	1000	1056	1200	T_{CPH}
VS Pulse Width	T_{DH}		800		T_{CPH}
VS DE Time	T_{HS}	10	45	110	$T_{DEH} + T_{DEL}$
VS Active Time	T_{EP}		480		
OEV Pulse Width	T_{OEV}		150		
CKV Pulse Width	T_{CKV}		133		
DE Internal-STV Time	T_1		4		
DE Internal-CKV Time	T_2		40		
DE Internal-OEV Time	T_3		23		
DE Internal-POL Time	T_4		157		
STV Pulse Width			1		

Note (1): $T_{HS} + T_{HA} < T_H$.

CLOCK AND DATA INPUT WAVEFORM

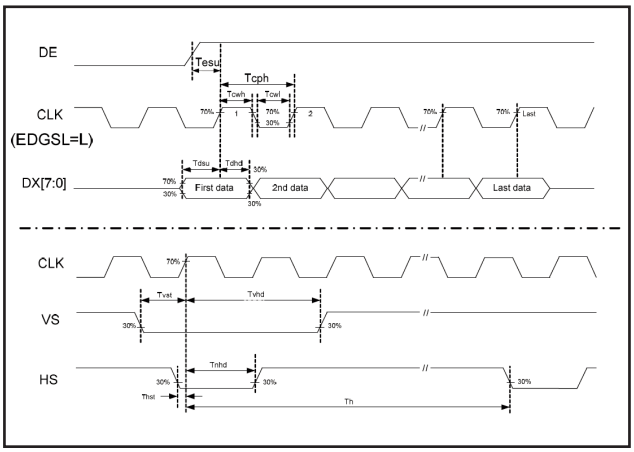

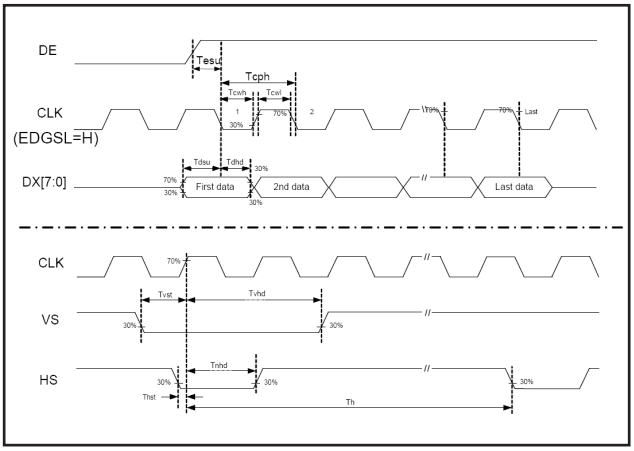

TFT TRANSMISSIVE LCD MODULES

YTS 800SLAA-01-100T

8'', 800 X 600 DOTS, 1/600 DUTY

EXTERNAL DIMENSION AND DISPLAY PATTERN

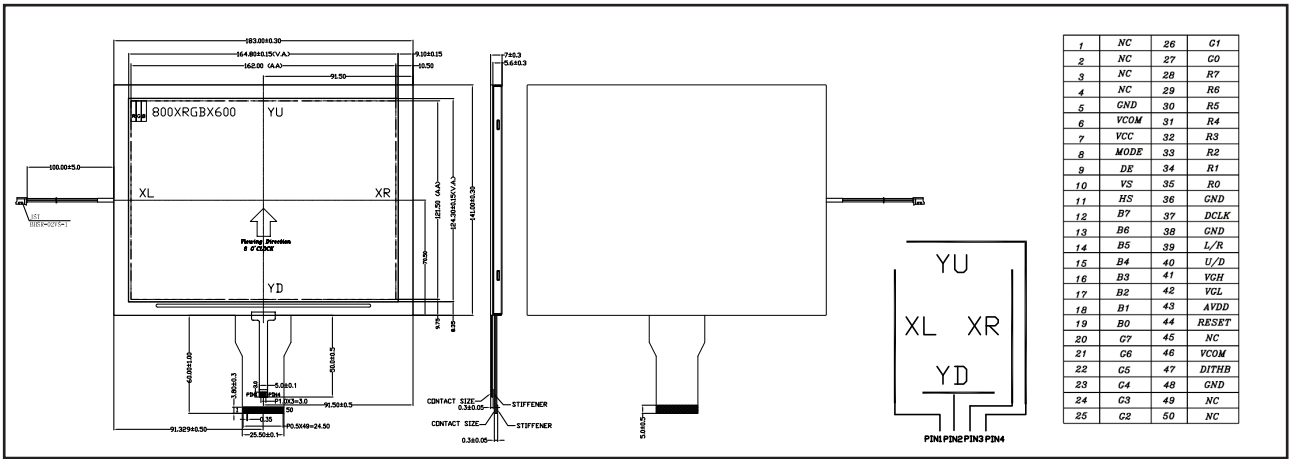

1	NC	26	G1
2	NC	27	G0
3	NC	28	R7
4	NC	29	R6
5	GND	30	R5
6	VCOM	31	R4
7	VCC	32	R3
8	MODE	33	R2
9	DE	34	R1
10	VS	35	R0
11	HS	36	GND
12	B7	37	DCLK
13	B6	38	GND
14	B5	39	L/R
15	B4	40	U/D
16	B3	41	VGH
17	B2	42	VGL
18	B1	43	AVDD
19	B0	44	RESET
20	G7	45	NC
21	G6	46	VCOM
22	G5	47	DITHB
23	G4	48	GND
24	G3	49	NC
25	G2	50	NC

MECHANICAL DATA

ITEM	SPECIFICATION	UNIT
Module Size (W x H x D)	183.0 x 141.0 x 7.0	mm
Active Area (W x H)	162.0 x 121.5	mm
Viewing Direction	6:00	o´clock
Number of Dots	800 (RGB) x 600	dots
Color Sturation (NTSC)	16.7M	%

ABSOLUTE MAXIMUM RATINGS (1,2)

PARAMETER	SYMBOL	MIN.	MAX.	UNIT
Digital Supply Voltage	V_{CC}	-0.5	5.0	V
Analog Power Supply Voltage	AV_{DD}	-0.5	15.0	V
TFT Device ON Voltage	V_{GH}	-0.3	42.0	V
TFT Device OFF Voltage	V_{GL}	V_{GH}-42.0	0.3	V
Operating Temperature	See page 8			
Storage Temperature				

Note (1): Voltage listed above are with respective to GND=0V. Ta=25°C.
Note (2): Device is subject to be dmaged permanently if stresses beyond those absolute maximum ratings listed above.

PIN CONFIGURATION

PIN	SYMBOL	I/O	SIGNAL DESCRIPTION
1-4	NC		No Connection
5	GND	P	Power Ground
6	V_{COM}	I	Common Voltage
7	V_{CC}	P	Power for Digital Circuit
8	MODE	I	DE / SYNC Mode Select (6)
9	DE	I	Data Input Enable
10	VS	I	Vertical SYNC Input
11	HS	I	Horizontal SYNC Input
12	B_7	I	Blue Data (MSB)
13-18	B_6 - B_1	I	Blue Data
19	B_0	I	Blue Data (LSB)
20	G_7	I	Green Data (MSB)
21-26	G_6 - G_1	I	Green Data
27	G_0	I	Green Data (LSB)
28	R_7	I	Red Data (MSB)
29-34	R_6 - R_1	I	Red Data
35	R_0	I	Red Data (LSB)
36	GND	P	Power Ground
37	DCLK	I	Sample Clock
38	GND	P	Power Ground
39	L/R	I	Right / Left Selection (9)
40	U/D	I	Up / Down Selection (9)
41	V_{GH}	P	Gate ON Voltage
42	V_{GL}	P	Gate OFF Voltage
43	AV_{DD}	P	Power for Analog Circuit
44	RESET	I	Global Reset Pin (7)
45	NC		No Connection
46	V_{COM}	I	Common Voltage
47	DITHB	I	Dithering Function (8)
48	GND	P	Power Ground
49-50	NC		No Connection

Note (6): DE/SYNC mode select, normally pull high: High - DE Mode; Low - SYNC Mode.
Note (7): Global Reset Pin. Active low to enter reset state. Suggest to connecting with an RC reset circuit for stability. Normally pull high.
Note (8): Dithering function enable control. Normally pull high:
DITHB="1". Disable internal dithering function. For 18 bits RGB interface, connect two LSB bits of all the R/G/B data buses to GND.
DITHB="0". Enable internal dithering function. For 24 bits RGB interface.
Note (9): The 39 and 40 pin (L/R, U/D) scanning direction set section.

Setting of Scan Control Input		Scanning Direction
U/D	L/R	
GND	V_{CC}	Up to Down, Left to Right
V_{CC}	GND	Down to Up, Right to Left
GND	GND	Up to Down, Right to Left
V_{CC}	V_{CC}	Down to Up, Left to Right

ELECTRICAL CHARACTERISTICS, Ta = 25°C

ITEM	SYMBOL	SPEC. VALUE			UNIT
		MIN.	TYP.	MAX.	
Digital Power Supply Voltage (3)	V_{CC}	3.0	3.3	3.6	V
Analog Power Supply Voltage	AV_{DD}	10.2	10.4	10.6	V
Digital Operating Current (3)	I_{CC}		10.0		mA
Analog Operating Current	IA V_{DD}		25.0		mA
Frame Frequency	FFrame		60.0		Hz
TFT Device ON Voltage	V_{GH}	15.3	16.0	16.7	V
TFT Device OFF Voltage	V_{GL}	-7.7	-7.0	-6.3	V
Common Power Supply Voltage (4)	V_{COM}		3.6		V
Logic High Input Voltage	V_{IH}	0.7 V_{CC}		V_{CC}	V
Logic Low Input Voltage	V_{IL}	0		0.3 V_{CC}	V

Note (3): Test condition: V_{CC}=3.3V; Test pattern: Black
Note (4): Please adjust V_{COM} to make the flicker level be minimum.

BACKLIGHTING CHARACTERISTICS, Ta = 25°C, LED

ITEM	SYMBOL	CONDITION	SPEC. VALUE			UNIT
			MIN.	TYP.	MAX.	
Backlight Voltage	V_{BL}			9.9	10.5	V
LED Current	I_F			180	225	mA
Power Consumption	P_{BL}			1782	2362.5	mW
Life Time (5)			10000			hr

Note (5): Brightness to be decreased to 50% of the intial value.

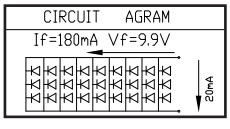

digital electronic gmbh • Tel. +49 (0) 8221/708-0 Fax. +49 (0) 8221/708-80

All specifications subject to change without notice.

TFT TRANSMISSIVE LCD MODULES

YTS 800SLAA-01-100T

8'', 800 X 600 DOTS, 1/600 DUTY

TIMING CHARACTERISTICS: HORIZONTAL

PARAMETER	SYMBOL	MIN.	TYP.	MAX.	UNIT
Horizontal Display Area	T_{HD}		800		CLK
CLK Frequency	F_{CLK}		40	50	MHz
One Horizontal Line	T_H	862	1056	1200	CLK
HS Pulse Width	T_{HPW}	1		40	CLK
HS Back Porch	T_{HB}		46		CLK
HS Front Porch	T_{HFP}	16	210	354	CLK

TIMING CHARACTERISTICS: VERTICAL

PARAMETER	SYMBOL	MIN.	TYP.	MAX.	UNIT
Vertical Display Area	T_{VD}		600		th
VS Period Time	T_V	624	635	700	th
VS Pulse Width	T_{VPW}	1		20	th
VS Back Porch	T_{VB}		23		th
VS Front Porch	T_{VFP}	1	12	77	th

Horizontal Input Timing

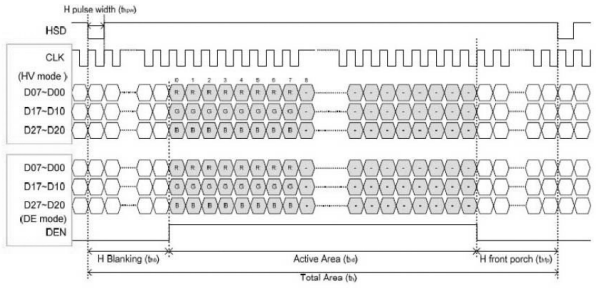

Vertical Input Timing

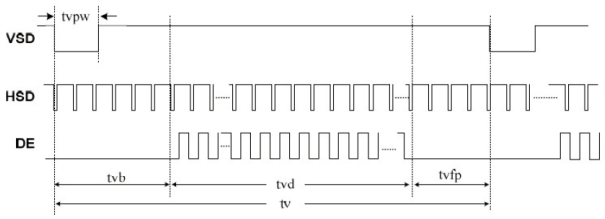

AC CHARACTERISTICS

PARAMETER	MIN.	TYP.	MAX.	UNIT
T_1	1		2	ms
T_2	0	60		ms
T_3	200			ms
T_4	200			ms
T_5	1			ms
T_6	1000			ms

Power ON / OFF Sequence

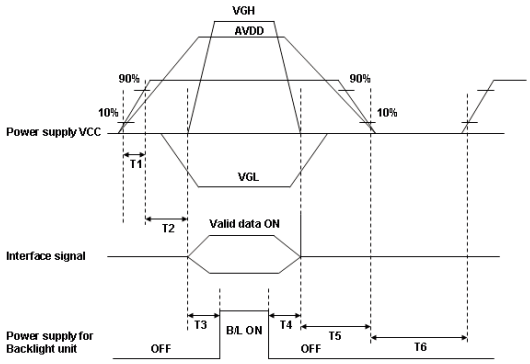

AC CHARACTERISTICS

PARAMETER	SYMBOL	MIN.	TYP.	MAX.	UNIT
CLKIN Cycle Time	T_{CPH}	20			ns
CLKIN Pulse Duty	T_{CWH}	40	50	60	%
VSD Setup Time	T_{VST}	8			ns
VSD Hold Time	T_{VHD}	8			ns
HSD Setup Time	T_{HST}	8			ns
HSD Hold Time	T_{HHD}	8			ns
Data Setup Time (1)	T_{DSU}	8			ns
Data Hold Time (1)	T_{DHD}	8			ns
DEN Setup Time	T_{ESU}	8			ns
DEN Hold Time	T_{EHD}	8			ns

Note (1): D_0 [7;0], D_1 [7;0], D_2 [7;0] to CLKIN.

AC Electrical Characteristics

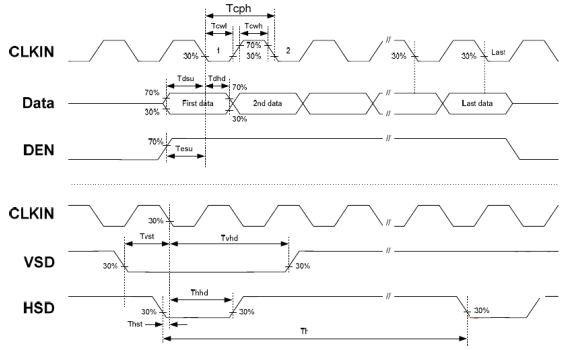

CUSTOM-DESIGN LCD PANELS

YDDC1001ABTRP

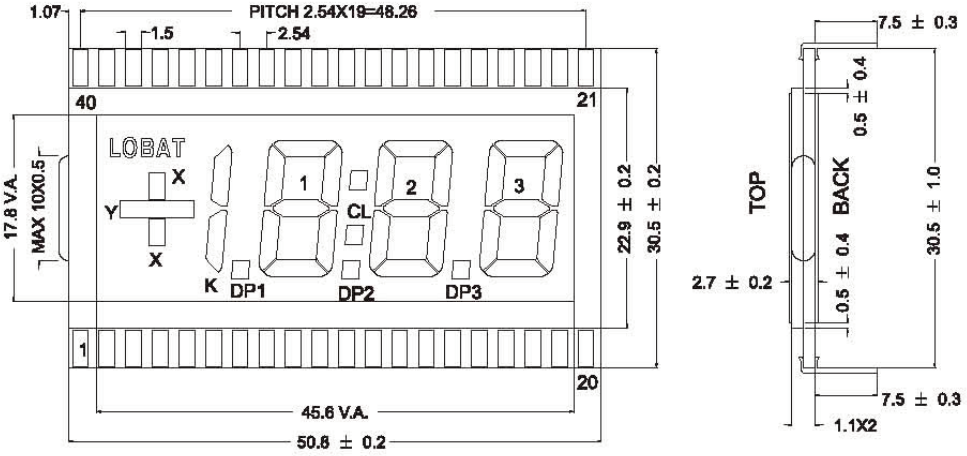

ITEM	SPECIFICATION
LCD Type	TN
Display Mode	Positive
Drive Method	3V, Statio
Polarizer Type	T/R
Viewing Angle	6:00
Connector	Pin
Operating Temperature	0°C to 60°C
Storage Temperature	-10°C to 70°C

YDDC4588AAYHP

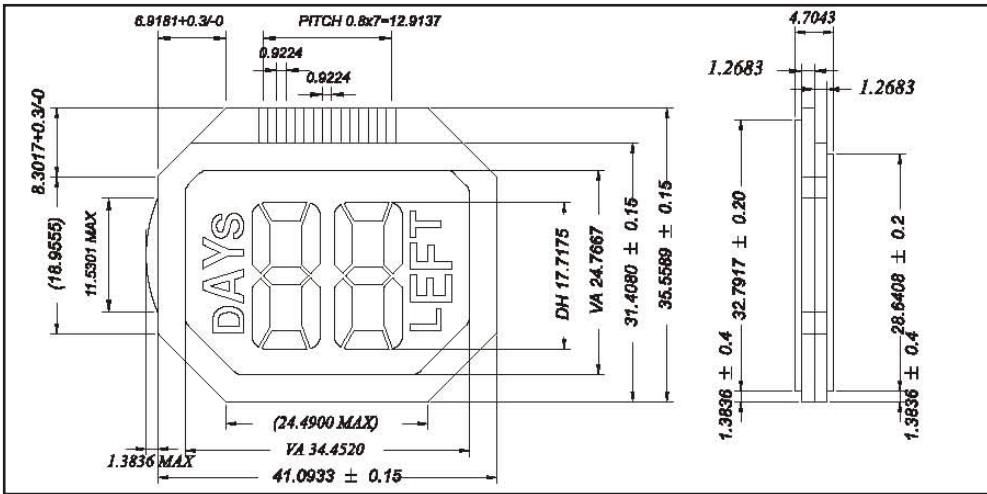

ITEM	SPECIFICATION
LCD Type	TN
Display Mode	Positive
Drive Method	2.7V, 1/3 Duty, 1/2 Bias
Polarizer Type	T/H
Viewing Angle	12:00
Connector	Pin
Operating Temperature	0°C to 50°C
Storage Temperature	-20°C to 80°C

YDDC4179AATRZ

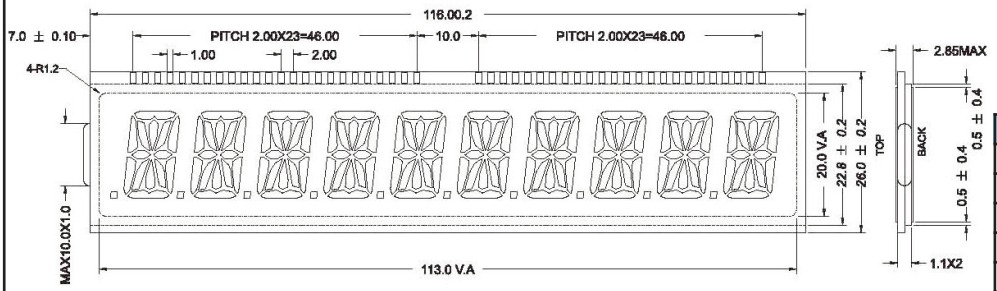

ITEM	SPECIFICATION
LCD Type	TN
Display Mode	Positive
Drive Method	4.7V, 1/4 Duty, 1/3 Bias
Polarizer Type	T/R
Viewing Angle	6:00
Connector	Zebra
Operating Temperature	0°C to 50°C
Storage Temperature	-10°C to 60°C

digital electronic gmbh • Tel. +49 (0) 8221/708-0 Fax. +49 (0) 8221/708-80

All specifications subject to change without notice.

CUSTOM-DESIGN LCD PANELS

YDDC4617AATRZ

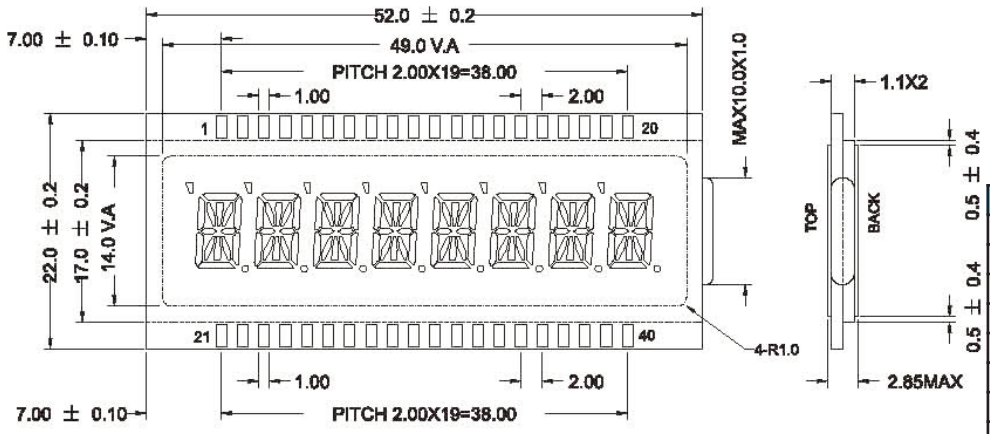

ITEM	SPECIFICATION
LCD Type	TN
Display Mode	Positive
Drive Method	5V, 1/4 Duty, 1/3 Bias
Polarizer Type	T/R
Viewing Angle	6:00
Connector	Zebra
Operating Temperature	0°C to 50°C
Storage Temperature	-10°C to 60°C

YDDH3015HPTHP

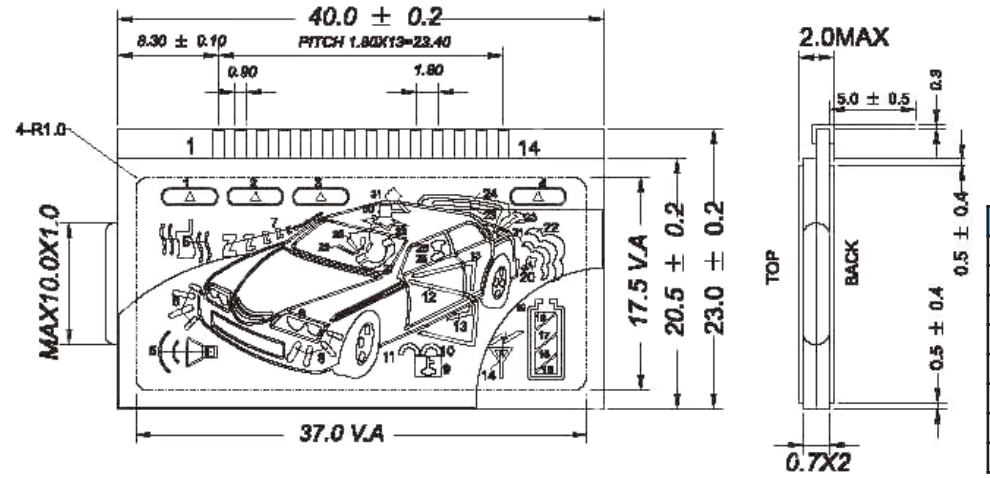

Without Screen Printing.

Car Line: black
Road: green
Cars Light: sky blue
Icon1-3, Lamp, Battery: red

ITEM	SPECIFICATION
LCD Type	TN
Display Mode	Positive
Drive Method	3V, 1/3 Duty,1/2 Bias
Polarizer Type	T/H
Viewing Angle	12:00
Connector	Pin
Operating Temperature	0°C to 60°C
Storage Temperature	-20°C to 70°C

YDDF0033BFTRH

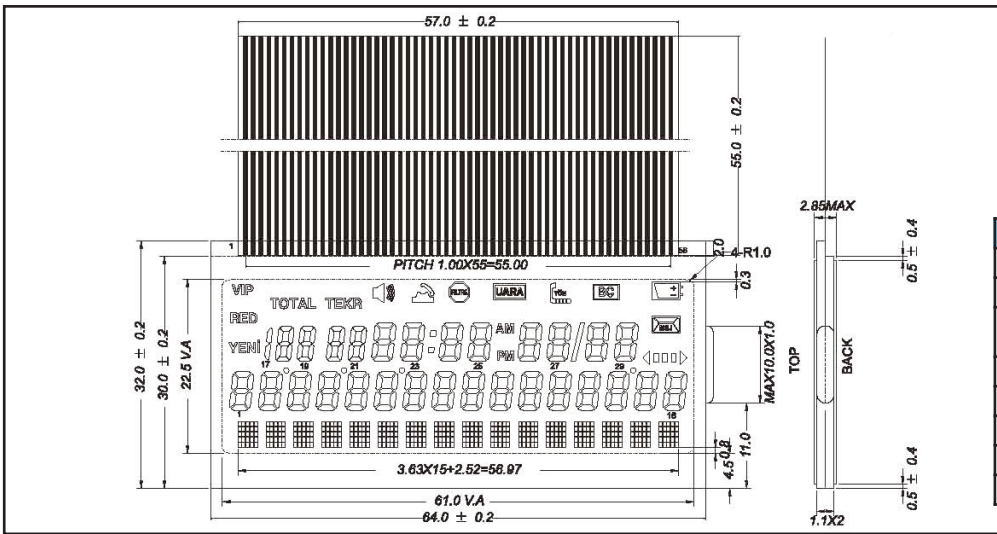

ITEM	SPECIFICATION
LCD Type	TN
Display Mode	Positive
Drive Method	4.5V, 1/16 Duty, 1/5 Bias
Polarizer Type	T/R
Viewing Angle	6:00
Connector	Zebra
Operating Temperature	0°C to 50°C
Storage Temperature	-10°C to 60°C

CUSTOM-DESIGN LCD PANELS

YDDC1310AABTP

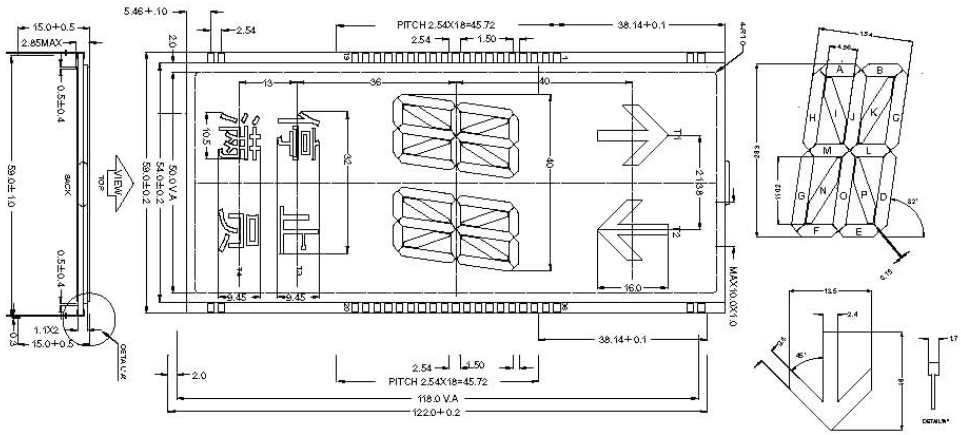

ITEM	SPECIFICATION
LCD Type	STN Blue
Display Mode	Negative
Drive Method	5V
Polarizer Type	T/T
Viewing Angle	6:00
Connector	Pin
Operating Temperature	-20°C to 70°C
Storage Temperature	-30°C to 80°C

YDDC2205ACNTP

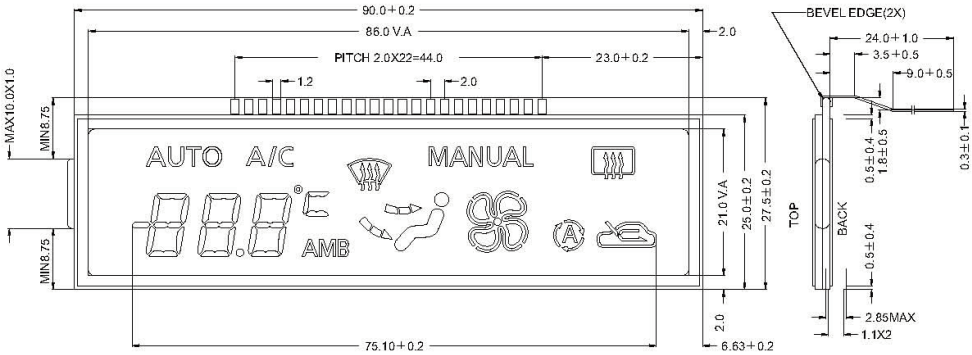

ITEM	SPECIFICATION
LCD Type	FSTN
Display Mode	Negative
Drive Method	5V
Polarizer Type	T/T
Viewing Angle	12:00
Connector	Pin
Operating Temperature	-30°C to 80°C
Storage Temperature	-40°C to 85°C

YDDC41393AATNP

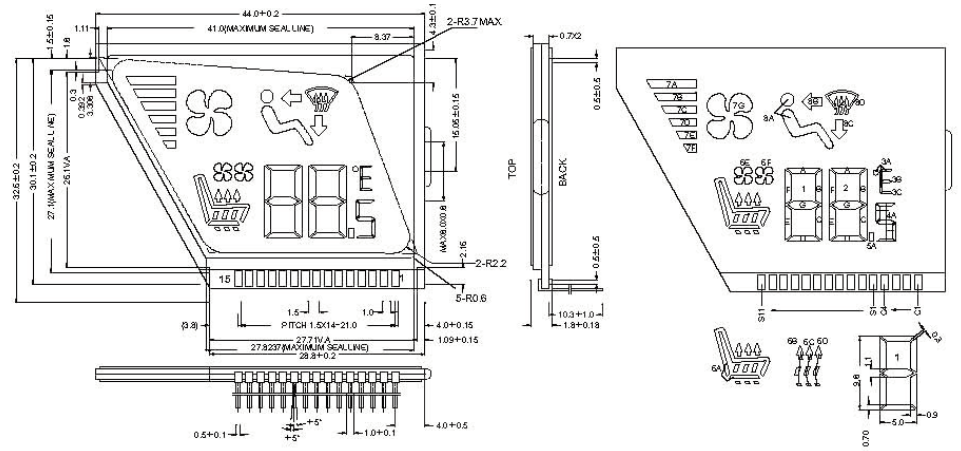

ITEM	SPECIFICATION
LCD Type	TN
Display Mode	Negative
Drive Method	5V
Polarizer Type	T/H
Viewing Angle	12:00
Connector	Pin
Operating Temperature	-40°C to 85°C
Storage Temperature	-40°C to 85°C

digital electronic gmbh • Tel. +49 (0) 8221/708-0 Fax. +49 (0) 8221/708-80

All specifications subject to change without notice.

CUSTOM-DESIGN LCD PANELS

YDDT0008AAFH

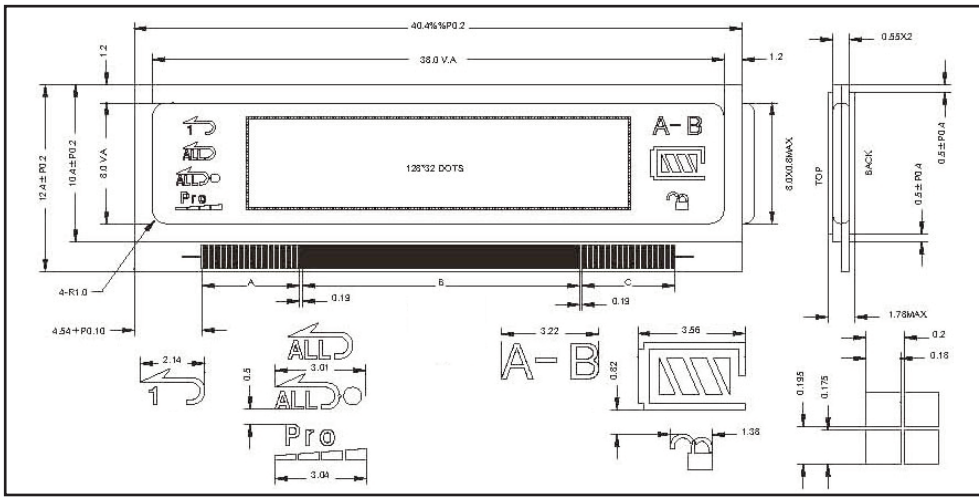

A: Pitch 0.18x36 6.48
B: Pitch 0.14x131 18.34
C: Pitch 0.18x34 6.12

ITEM	SPECIFICATION
LCD Type	FSTN
Display Mode	Positive
Drive Method	9V
Polarizer Type	T/H
Viewing Angle	6:00
Connector	TAB
Operating Temperature	-10°C to 60°C
Storage Temperature	-20°C to 70°C

YDDT0015AAFH

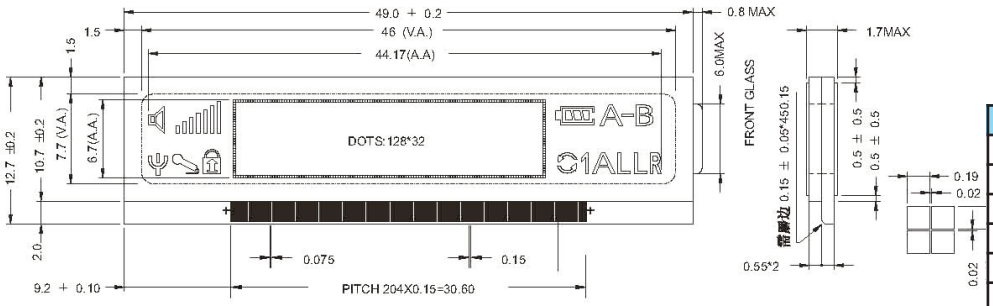

ITEM	SPECIFICATION
LCD Type	FSTN
Display Mode	Positive
Drive Method	9V
Polarizer Type	T/H
Viewing Angle	6:00
Connector	TAB
Operating Temperature	-20°C to 70°C
Storage Temperature	-30°C to 80°C

YDDC2186AATNZ

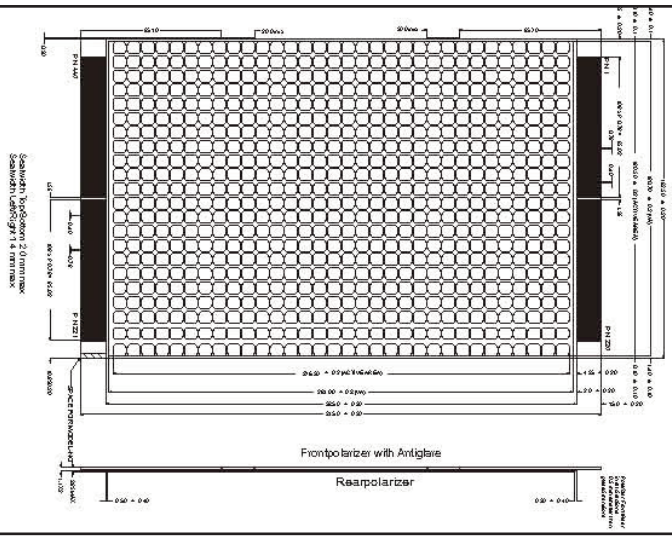

ITEM	SPECIFICATION
LCD Type	TN
Display Mode	Negative
Drive Method	6.5V max.
Polarizer Type	T/T
Viewing Angle	6:00
Connector	Zebra
Operating Temperature	-20°C to 75°C
Storage Temperature	-25°C to 85°C

CUSTOM-DESIGN LCD-PANEL NUMBERING SYSTEM

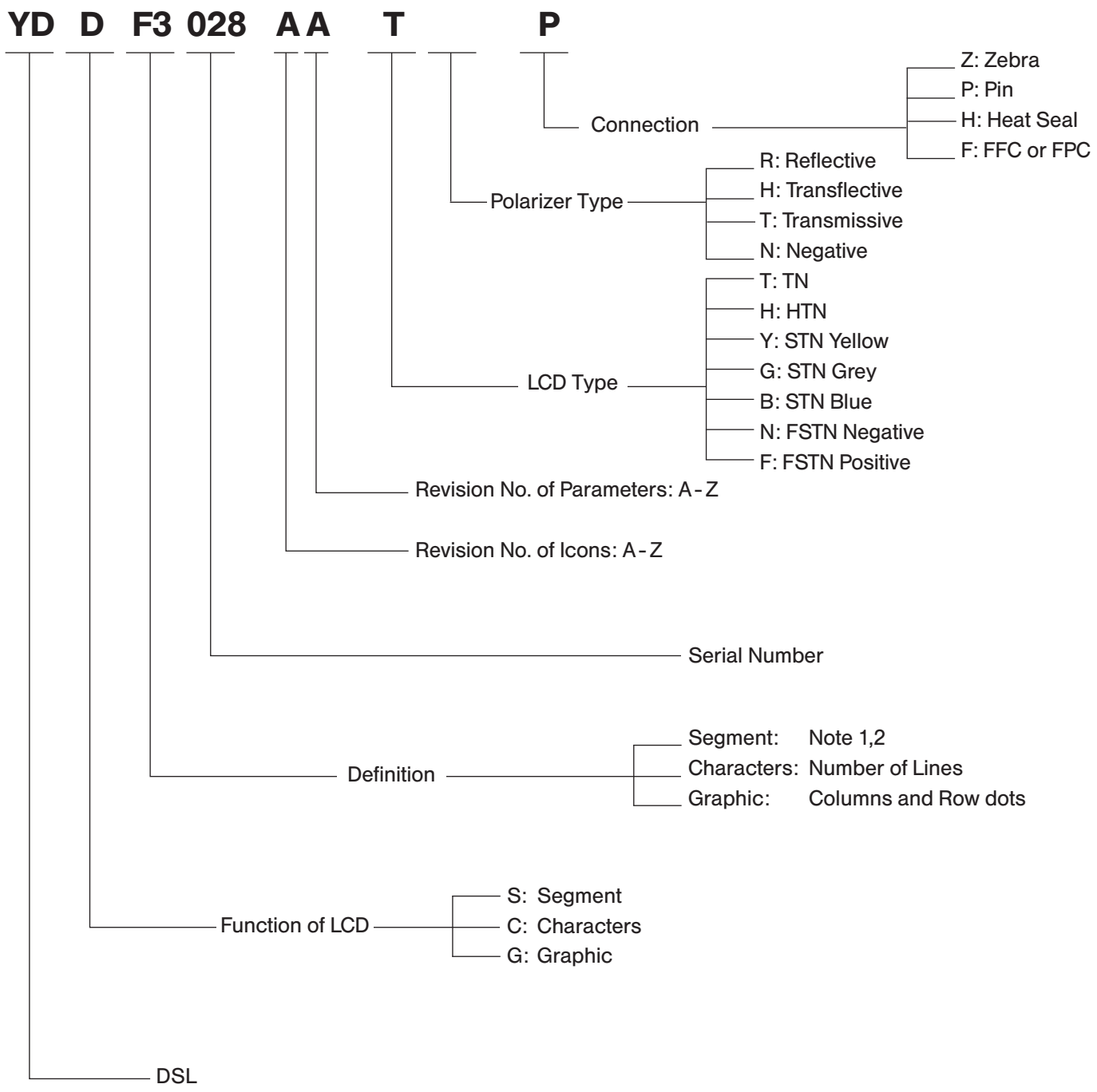

Note 1. For segment type, the serial Number is two digit number. For character, the maximum Number is three digit.

Note 2. The letters indicates the application of the LCD panels:

A. Clock	F. Telephone	O. COG
B. Calculator	G. Remote controller	
C. Instruments and meters	H. Audio and video	
D. Calender	I. Other	
E. Game	T. TAB	

The digit indicates the duty , when the duty is more than 1/9, it indicates 0.

digital electronic gmbh • Tel. +49 (0) 8221/708-0 Fax. +49 (0) 8221/708-80

All specifications subject to change without notice.

STANDARD MODULE NUMBERING SYSTEM

YM C 161 01 A A A T D C L

- **L**
  - N: No Backlight
  - E: EL Backlight
  - L: LED Backlight
  - C: CCFL Backlight
- **C**
  - C: COB
  - S: SMT
  - T: TAB
  - G: COG
  - F: COF
- **D** — Viewing Angle
  - R: 3:00
  - D: 6:00
  - L: 9:00
  - U: 12:00
- **T** — LCD Type
  - T: TN
  - H: HTN
  - Y: STN Yellow
  - G: STN Grey
  - B: STN Blue
  - N: FSTN Negative
  - F: FSTN Positive
- **A** — Revision No. of Module: A-Z
- **A** — Revision No. of Parameters: A-Z
- **A** — Revision No. of Icons: A-Z
- **01** — Product Serial Number
- **161** — Definition
  - Segment
  - Character Module: Characters and Lines
  - Graphic Module: Columns and Rows
- **C** — C: Customer Module / S: Standard Module
- **YM** — DSL

LCD PANEL CHECK LIST

APPLICATION	☐ Clock (Watch) ☐ Calculator ☐ Instruments ☐ Calendar ☐ Game ☐ Telephone ☐ Remoter ☐ Others _____
	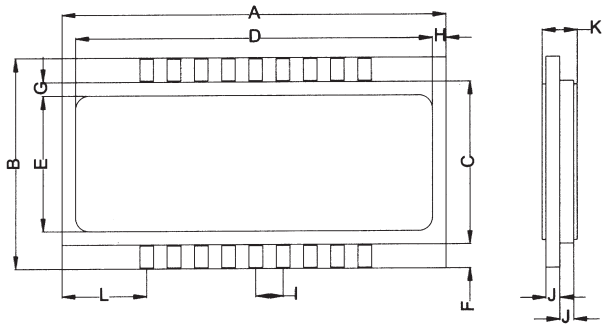 A ... Width of Glass: _____ mm B ... Front of Glass: _____ mm(H) C ... Rear of Glass: _____ mm(H) D ... Viewing Area: _____ mm(W) E ... Viewing Area: _____ mm(H) F ... Terminal: _____ mm(H) G ... Seal Width I: _____ mm H ... Seal Width II I ... Pitch of Terminal _____ mm J ... Glass Thickness _____ mm K ...Total Thickness _____ mm L ... Eage to Terminal _____ mm N ... Position of Injektion port ☐ Right ☐ Left
DISPLAY MODE	1. ☐ TN ☐ HTN ☐ STN ☐ Other _____ 2. ☐ Positive ☐ Negative 3. ☐ 3:00 ☐ 6:00 ☐ 9:00 ☐ 12:00 ☐ Other _____
DRIVE METHOD	Driving Voltage: _____ V Duty: _____ Bias: _____ Freq: _____ Hz
POLARIZER	☐ Reflective ☐ Transmissive ☐ Transflective Front: ☐ Pasted ☐ Separated Rear: ☐ Pasted ☐ Separated
TEMPERATURE	Operating Temperature: _____ °C ~ _____ °C Storage Temperature: _____ °C ~ _____ °C
CONNECTOR	1. ☐ Zebra ☐ Pin ☐ Heat Seal ☐ Other _____
LCD CONFIGURATION	☐ ☐ ☐ ☐ ☐ ☐ ☐ Other 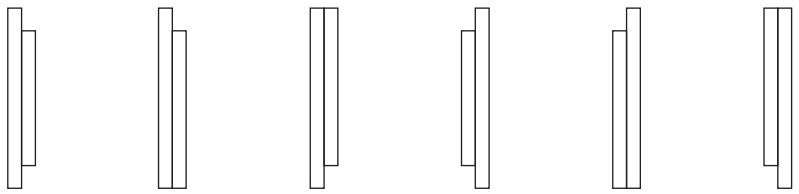
SCHEDULE	A. Counter drawing for approval by: B. Operating sample for approval by: C. Mass production starting from: Order volume: pcs/month Total: purchase
REMARK	
COMPANY	ATTENTION
PHONE:	FAX: DATE:

digital electronic gmbh • Tel. +49 (0) 8221/708-0 Fax. +49 (0) 8221/708-80

All specifications subject to change without notice.

LCD MODULE CHECK LIST

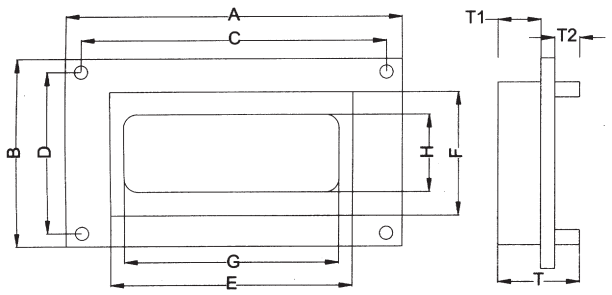

A.	OUTLINE DIMENSION	(A x B)	_____ x _____ mm
B.	MOUNTING HOLE LOCATION	(C x D)	_____ x _____ mm
C.	HOLDER SIZE	(E x F)	_____ x _____ mm
D.	VIEW AREA	(G x H)	_____ x _____ mm
E.	DIAMETER OF MOUNTING HOLE	(1)	_____ x _____ mm
F.	UPPER THICKNESS	(T1)	_____ x _____ mm
G.	LOWER THICKNESS	(T2)	_____ x _____ mm
H.	EXTERNAL HEIGHT	(T)	_____ x _____ mm

DISPLAY SPEC

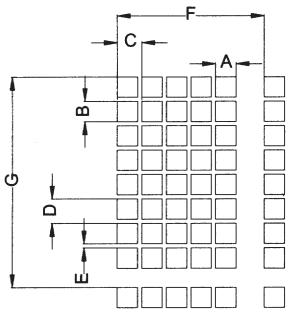

(1) CHARACTER TYPE:

A.	CHARACTER FONT: ____ x ____ DOTS, WITH / WITHOUT CURSOR.		
B.	CHARACTER TYPE: ____ CHARACTERS x ____ LINES.		
C.	DOT SIZE	(A x B)	_____ x _____ mm
D.	DOT PITCH	(C x D)	_____ x _____ mm
E.	CURSOR SPACE	(E)	_____ x _____ mm
F.	CHARACTERPITCH:	(F x G)	_____ x _____ mm
G.	OTHERS:		_____ x _____ mm

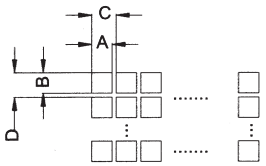

(2) CHARACTER TYPE:

A.	NUMBER OF DOTS		_____ x _____ mm
B.	DOT SIZE	(A x B)	_____ x _____ mm
C.	DOT PITCH	(C x D)	_____ x _____ mm
D.	OTHERS:		_____ x _____ mm

EXTERNAL CONNECTION METHOD

☐ PATTERN TERMINAL ☐ CONNECTOR: ☐ OTHERS:

LCD SPECIFICATION

A. VIEWING ANGLE: ☐ 6:00 ☐ 12:00 ☐ OTHER

B. LCD TYPE: ☐ TN ☐ STN YELLOW ☐ STN GRAY ☐ STN BLUE ☐ FSTN B/W ☐ OTHER

☐ REFLECTIVE ☐ TRANSMISSIVE ☐ TRANSFLECTIVE

☐ POSITIVE TYPE ☐ NEGATIVE

C. VISUAL SPEC: ☐ NORMAL ☐ ANTI-GLARE ☐ _____

IC

A. COMMON DRIVE: _____ B. SEGMENT DRIVE: _____

C. CONTROLLER: _____ ☐ BUILT-IN ☐ EXTERNAL D. OTHERS _____

DRIVING METHOD

A. SUPPLY VOLTAGE FOR LOGIC: ☐ 5 V ☐ 3 V ☐ OTHER _____ V

B. SUPPLY VOLTAGE FOR LCD: ☐ _____ V

C. ☐ STATIC ☐ DUTY _____

BACKLIGHT

A. ☐ NO BACKLIGHT

B. BACKLIGHT TYPE: ☐ LED ☐ EL ☐ CCFL ☐ OTHER

C. BACKLIGHT COLOR: ☐ YELLOW ☐ GREEN ☐ AMBER ☐ RED ☐ BLUE ☐ WHITE ☐ _____

TEMPERATURE

OPERATING TEMPERATURE: _____ °C ~ _____ °C

STORAGE TEMPERATURE: _____ °C ~ _____ °C

SCHEDULE

A. ESTIMATE: B. SAMPLE: DELIVERY: _____ QUANTITY: _____ PCS

C. MASS PRODUCTION: DELIVERY: _____ QUANTITY PER LOT: _____ PCS

CUSTOMER

digital electronic
siegfried lehrer gmbh
Rudolf-Wanzl-Str. 3+5
D-89340 Leipheim / Germany
www.digitallehrer.de
digital@digitallehrer.de
Tel.: +49 (0) 82 21 / 70 8-0
Fax.: +49 (0) 82 21 / 70 8-80

seit since 1981

LCD-Displays... and more

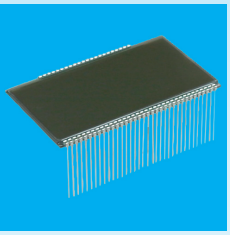

LCD-Displays

Zertifiziert nach ISO 9001:2015

GTÜ CERTIFICATION

RoHS compliant 2002/95/EC

DSL

2018